EANCOM® 2002 S3

ORDRSP

Purchase order response message

Edition 2016 Upd. 2021

2. Message Structure Chart 4
3. Branching Diagram..... 7
4. Segments Description 19
5. Segments Layout..... 28
6. Example(s) 144

1. Introduction

Status

MESSAGE TYPE	: ORDRSP
REFERENCE DIRECTORY	: D.01B
EANCOM® SUBSET VERSION	: 009

Definition

A message from a supplier to a buyer, responding to a Purchase Order message or a Purchase Order Change Request message.

Principles

A supplier may respond for one or more goods items or services.

The response may be:

- an acknowledgement of receipt and understanding of data content of the Purchase Order,
- a confirmation of acceptance of the Purchase Order,
- a proposal of amendment to the Purchase Order,
- a notification of non-acceptance for all or part of the Purchase Order.

A Purchase Order Response may refer to goods items or services related to one or more delivery schedules, call-offs, etc.

A Purchase Order Response for cross-border transactions may contain additional information for customs and/or statistical purposes.

A Purchase Order Response may contain details for transport and destination as well as delivery patterns.

A buyer's Purchase Order may be responded to by one or more response messages, according to business practice.

Description of the message

For guidance, the following principles serve to remove ambiguity in the application of an EDI Purchase Order Response.

1. Under accepted commercial practice in many industries, a Purchase Order, subsequent to being received by the supplier, is acknowledged by a response document indicating the supplier's acceptance of all, or part, or none of the buyer's order, and indicating where appropriate any changes requested to be made to the Purchase Order by the supplier to fulfil that order.

   Any change requested by the supplier to a Purchase Order may be acknowledged by the buyer by transmitting a new Purchase Order or a Purchase Order Change Request. Agreement on exact procedures should be reached between trading partners and this agreement may be included in the interchange agreement.

   When acknowledging a Purchase Order Response, the new Purchase Order or the Purchase Order Change Request will refer to the original Purchase Order. The new Purchase Order or Purchase Order Change Request will modify the original Purchase Order data when relevant, taking into account the supplier's reply in the Purchase Order Response.

2. Acknowledgement, confirmation and proposed amendments may be mixed within the message by using the appropriate identifier in the BGM and LIN segments.

3. The only segments and data elements required in the Purchase Order Response are those:

1. Introduction

- Marked in the branching diagram of the Purchase Order as mandatory, including the two repetitions of NAD identifying the buyer and the supplier.

- Changing the previous instructions, adding clarification or any other terms, in the heading section or detail section. If segments below LIN are changed then all segments below LIN must be re-transmitted. It is not an error to re-transmit unchanged data.

2. Message Structure Chart

EANCOM® 2002 S3 Edition 2016 Upd. 2021 Part II
ORDRSP Purchase order response message

UNA		1	C	1	- Service string advice
UNB		2	M	1	- Interchange header
Purchase Order Response Heading Section					
UNH		3	M	1	- Message header
BGM		4	M	1	- Beginning of message
DTM		5	M	35	- Date/time/period
PAI		6	C	1	- Payment instructions
ALI		7	C	5	- Additional information
FTX		8	C	99	- Free text
SG1			C	9999	- RFF-DTM
RFF		9	M	1	- Reference
DTM		10	C	5	- Date/time/period
SG3	*		C	99	- NAD-LOC-FII-SG4-SG6
NAD		11	M	1	- Name and address
LOC		12	C	25	- Place/location identification
FII	+	13	C	5	- Financial institution information
SG4			C	99	- RFF
RFF		14	M	1	- Reference
SG6			C	5	- CTA-COM
CTA		15	M	1	- Contact information
COM		16	C	5	- Communication contact
SG7			C	5	- TAX-MOA
TAX		17	M	1	- Duty/tax/fee details
MOA		18	C	1	- Monetary amount
SG8			C	5	- CUX-DTM
CUX		19	M	1	- Currencies
DTM		20	C	5	- Date/time/period
SG9			C	10	- PAT-DTM-PCD-MOA
PAT	X	21	M	1	- Payment terms basis
DTM		22	C	5	- Date/time/period
PCD		23	C	1	- Percentage details
MOA		24	C	1	- Monetary amount
SG10			C	10	- TDT-SG11
TDT		25	M	1	- Details of transport
SG11	*		C	10	- LOC-DTM
LOC		26	M	1	- Place/location identification
DTM	+	27	C	5	- Date/time/period
SG12			C	5	- TOD-LOC
TOD		28	M	1	- Terms of delivery or transport
LOC		29	C	2	- Place/location identification
SG13	+		C	99	- PAC-MEA-SG14
PAC	+	30	M	1	- Package
MEA		31	C	5	- Measurements
SG14	+		C	99	- PCI-RFF-DTM-GIN
PCI	+	32	M	1	- Package identification
RFF	+	33	C	1	- Reference
DTM	+	34	C	5	- Date/time/period
GIN	+	35	C	99	- Goods identity number
SG15	+		C	10	- EQD
EQD	+	36	M	1	- Equipment details
SG19			C	99	- ALC-ALI-DTM-SG20-SG21-SG22-SG23-SG24
ALC		37	M	1	- Allowance or charge
ALI		38	C	5	- Additional information
DTM		39	C	5	- Date/time/period

2. Message Structure Chart

EANCOM® 2002 S3 Edition 2016 Upd. 2021 Part II
ORDRSP Purchase order response message

SG20			C	1	- QTY-RNG
QTY		40	M	1	- Quantity
RNG		41	C	1	- Range details
SG21			C	1	- PCD-RNG
PCD		42	M	1	- Percentage details
RNG		43	C	1	- Range details
SG22			C	2	- MOA-RNG
MOA		44	M	1	- Monetary amount
RNG		45	C	1	- Range details
SG23			C	1	- RTE-RNG
RTE		46	M	1	- Rate details
RNG		47	C	1	- Range details
SG24			C	5	- TAX-MOA
TAX		48	M	1	- Duty/tax/fee details
MOA		49	C	1	- Monetary amount

Purchase Order Response Detail Section

SG26			C	200000	- LIN-PIA-IMD-MEA-QTY-ALI-DTM-MOA-GIN-QVR-FTX-SG30-SG31-
LIN		50	M	1	- Line item
PIA		51	C	25	- Additional product id
IMD		52	C	99	- Item description
MEA		53	C	99	- Measurements
QTY		54	C	99	- Quantity
ALI	+	55	C	5	- Additional information
DTM		56	C	35	- Date/time/period
MOA		57	C	10	- Monetary amount
GIN		58	C	1000	- Goods identity number
QVR		59	C	1	- Quantity variances
FTX		60	C	99	- Free text
SG30	*		C	25	- PRI-CUX-DTM
PRI		61	M	1	- Price details
CUX		62	C	1	- Currencies
DTM	+	63	C	5	- Date/time/period
SG31			C	9999	- RFF-DTM
RFF		64	M	1	- Reference
DTM		65	C	5	- Date/time/period
SG32	*		C	99	- PAC-MEA-QTY-SG34
PAC		66	M	1	- Package
MEA		67	C	5	- Measurements
QTY	+	68	C	5	- Quantity
SG34			C	99	- PCI-RFF-DTM-GIN
PCI		69	M	1	- Package identification
RFF		70	C	1	- Reference
DTM		71	C	5	- Date/time/period
GIN		72	C	99	- Goods identity number
SG35			C	9999	- LOC-QTY-DTM
LOC		73	M	1	- Place/location identification
QTY		74	C	1	- Quantity
DTM		75	C	5	- Date/time/period
SG36			C	10	- TAX-MOA
TAX		76	M	1	- Duty/tax/fee details
MOA		77	C	1	- Monetary amount
SG37			C	999	- NAD-SG40
NAD		78	M	1	- Name and address
SG40			C	5	- CTA-COM

2. Message Structure Chart

EANCOM® 2002 S3 **Edition 2016 Upd. 2021** **Part II**
ORDRSP Purchase order response message

CTA	79	M	1	- Contact information
COM	80	C	5	- Communication contact
SG41		C	99	- ALC-ALI-DTM-SG42-SG43-SG44-SG45-SG46
ALC	81	M	1	- Allowance or charge
ALI	82	C	5	- Additional information
DTM	83	C	5	- Date/time/period
SG42		C	1	- QTY-RNG
QTY	84	M	1	- Quantity
RNG	85	C	1	- Range details
SG43		C	1	- PCD-RNG
PCD	86	M	1	- Percentage details
RNG	87	C	1	- Range details
SG44		C	2	- MOA-RNG
MOA	88	M	1	- Monetary amount
RNG	89	C	1	- Range details
SG45		C	1	- RTE-RNG
RTE	90	M	1	- Rate details
RNG	91	C	1	- Range details
SG46		C	5	- TAX-MOA
TAX	92	M	1	- Duty/tax/fee details
MOA	93	C	1	- Monetary amount
SG47		C	10	- TDT
TDT	94	M	1	- Details of transport

Purchase Order Response Summary Section

UNS	95	M	1	- Section control
MOA	96	C	12	- Monetary amount
CNT	97	C	10	- Control total
UNT	98	M	1	- Message trailer
UNZ	99	M	1	- Interchange trailer

3. Branching Diagram

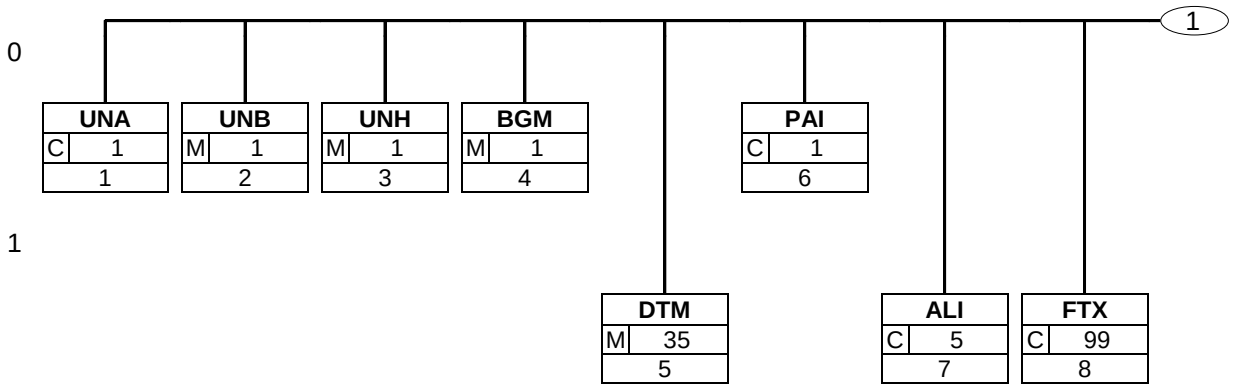

3. Branching Diagram

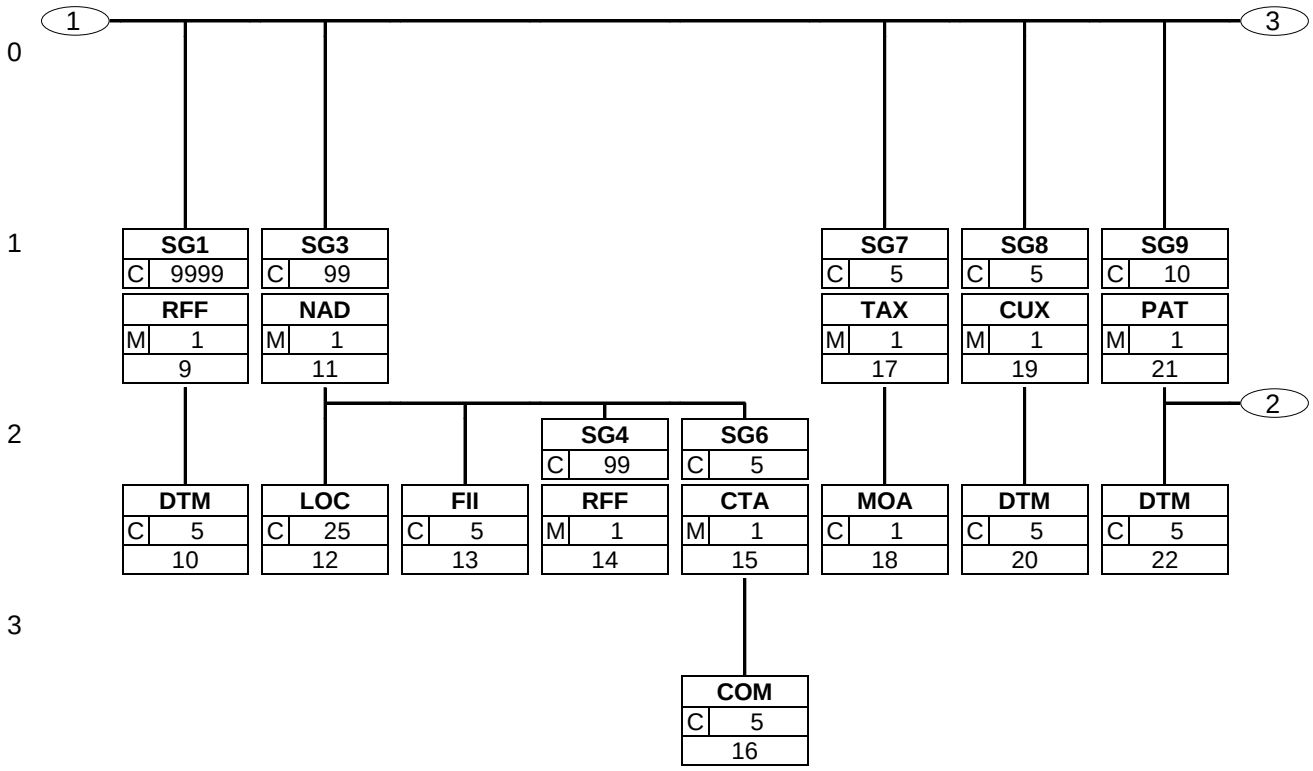

3. Branching Diagram

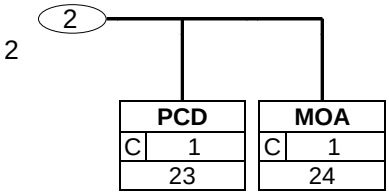

3. Branching Diagram

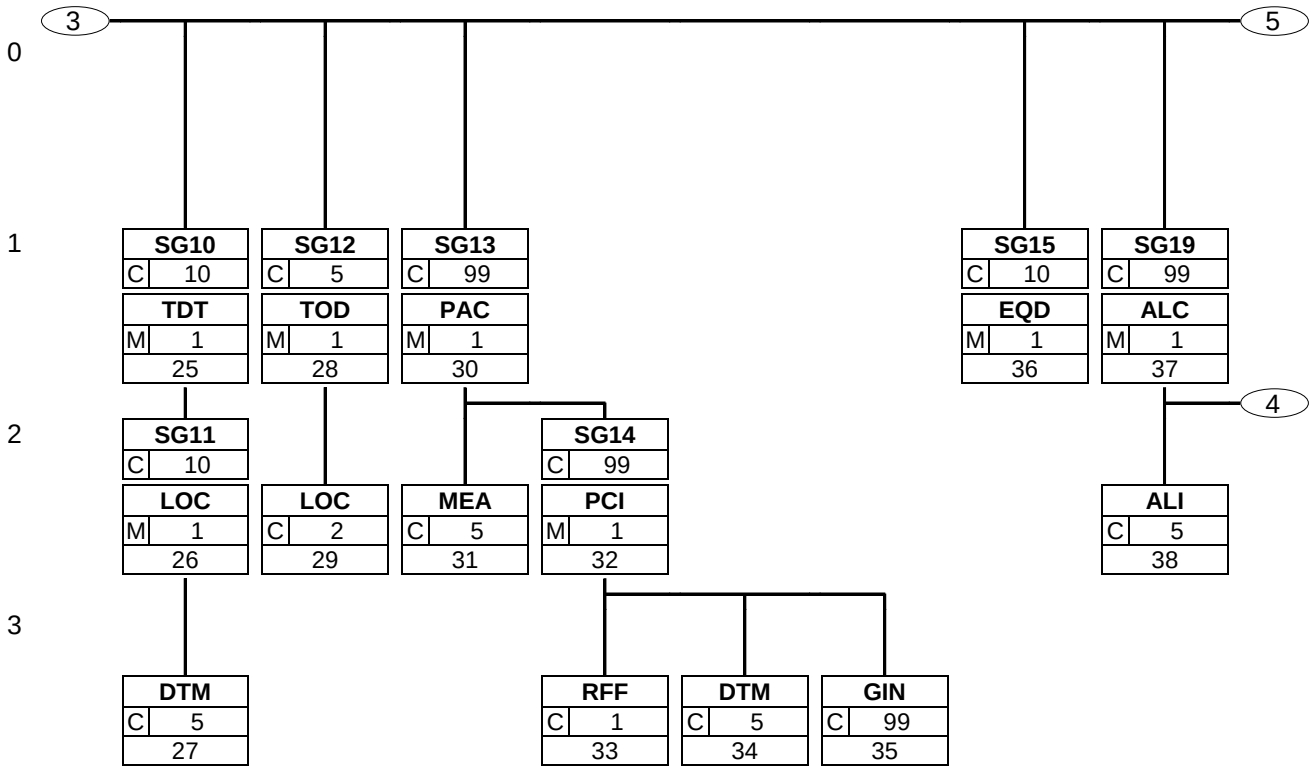

3. Branching Diagram

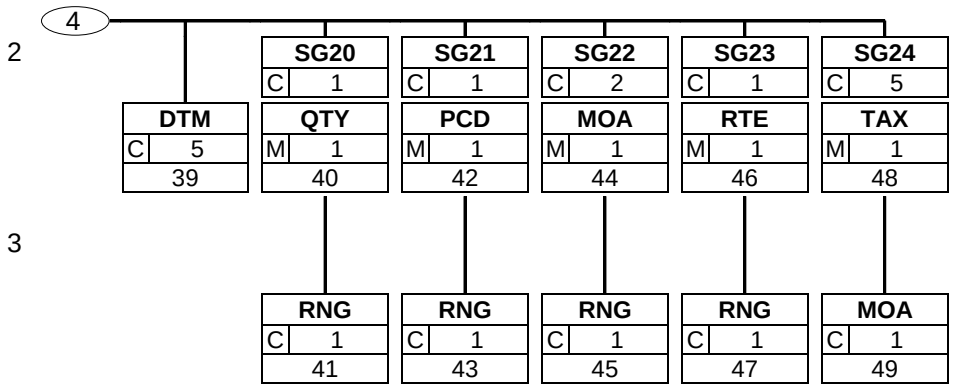

3. Branching Diagram

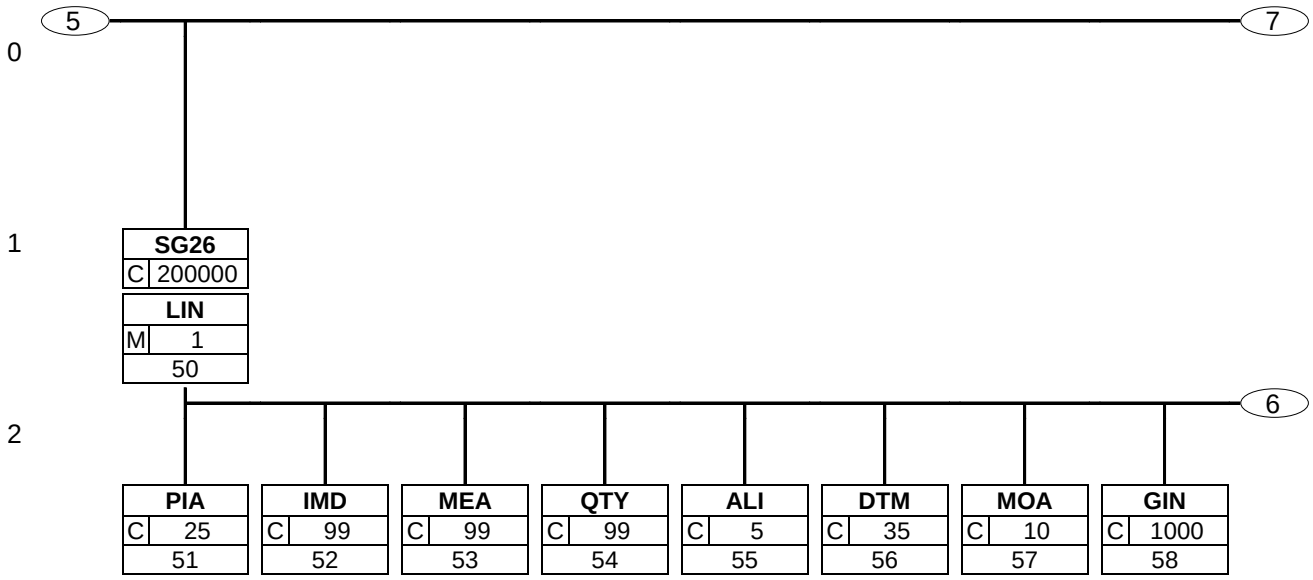

3. Branching Diagram

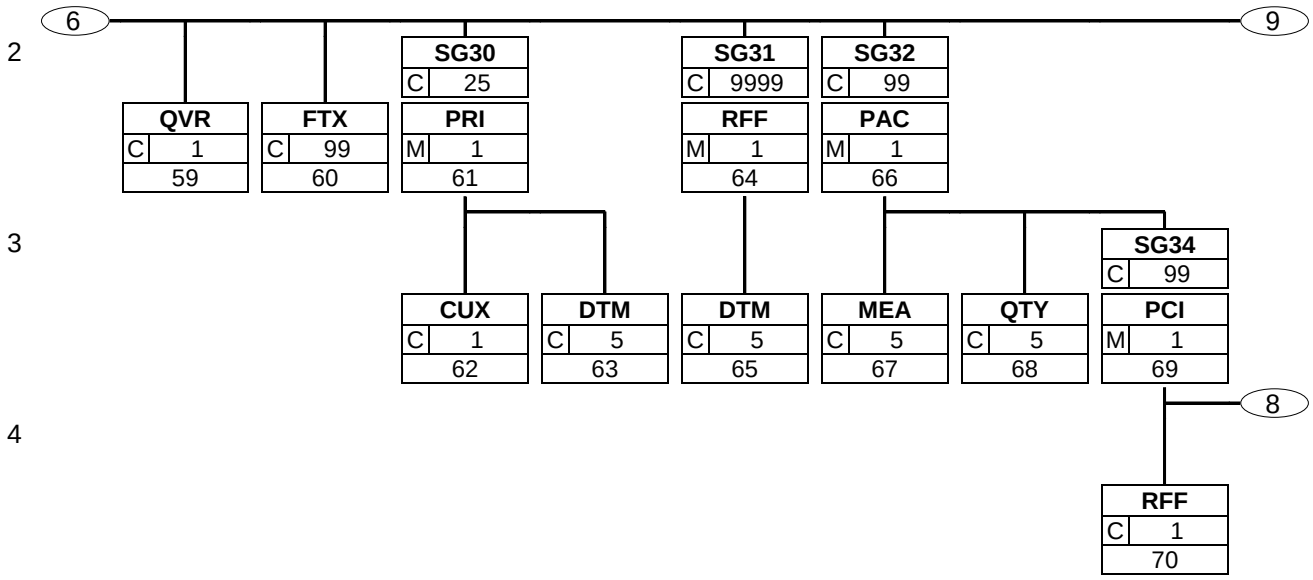

3. Branching Diagram

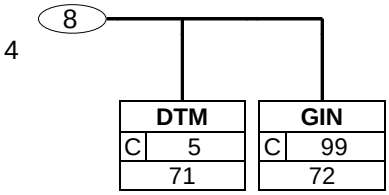

3. Branching Diagram

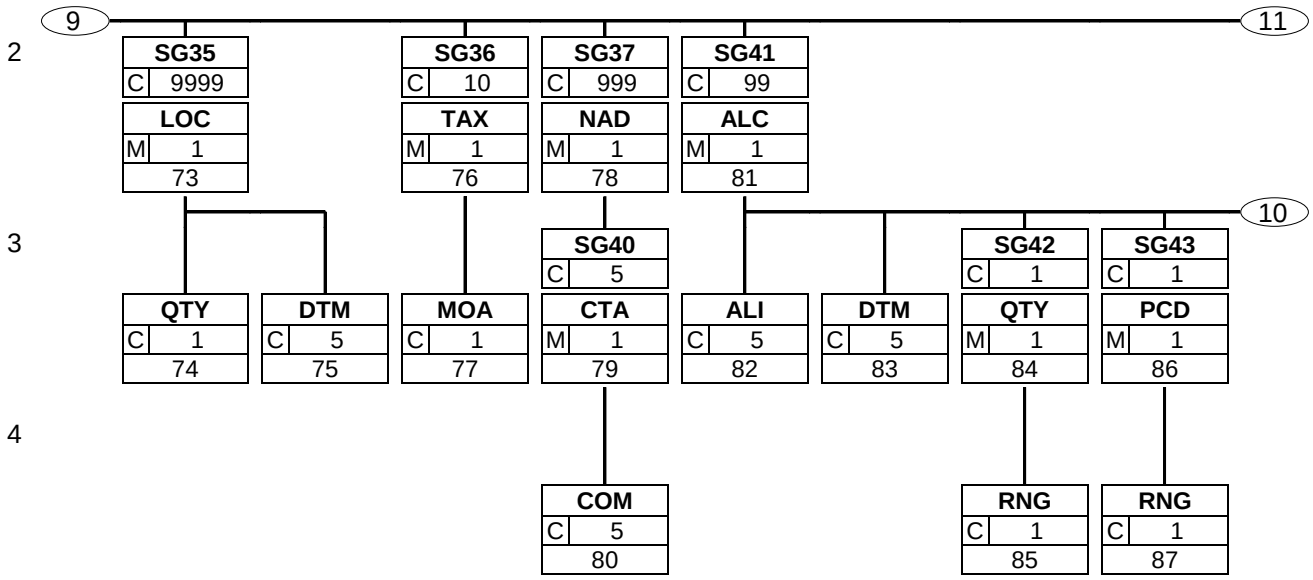

3. Branching Diagram

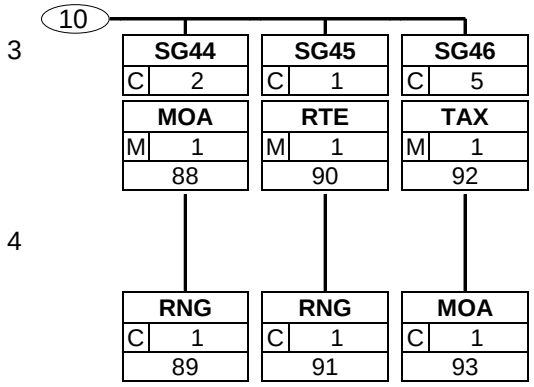

3. Branching Diagram

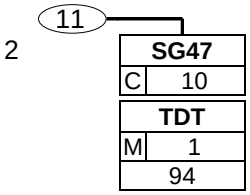

3. Branching Diagram

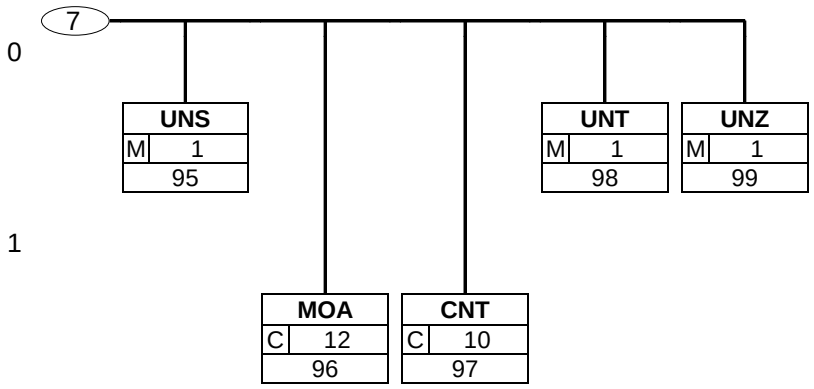

4. Segments Description

UNA - C 1 - Service string advice

The service string advice shall begin with the upper case characters UNA immediately followed by six characters in the order shown below. The same character shall not be used in more than one position of the UNA.

UNB - M 1 - Interchange header

This segment is used to envelope the interchange, as well as to identify both, the party to whom the interchange is sent and the party who has sent the interchange. The principle of the UNB segment is the same as a physical envelope which covers one or more letters or documents, and which details, both the address where delivery is to take place and the address from where the envelope has come.

Purchase Order Response Heading Section

UNH - M 1 - Message header

This segment is used to head, identify and specify a message.

BGM - M 1 - Beginning of message

This segment is used to indicate the type and function of a message and to transmit the identifying number.

DTM - M 35 - Date/time/period

This segment is used to specify dates/times relating to the Purchase Order Response, or if required, dates relating to the delivery or collection of the goods.

PAI - C 1 - Payment instructions

This segment is used to indicate payment instructions, which may be used or imposed by the party issuing the order.

ALI - C 5 - Additional information

This segment is used to specify any additional information related to the complete purchase order response message.

FTX - C 99 - Free text

This segment is used to provide any free text information related to the complete purchase order response message.

SG1 - C 9999 - **RFF-DTM**

A group of segments for giving references and where necessary, their dates, relating to the whole message, e.g. contract number, import/export licence number, reservation number.

RFF - M 1 - Reference

This segment is used to refer to the Purchase Order or Purchase Order Change Request to which the Purchase Order Response is responding.

DTM - C 5 - Date/time/period

This segment is used to specify dates relating to the references given in the preceding RFF segment.

SG3 - C 99 - **NAD-LOC-FII-SG4-SG6**

A group of segments identifying the parties with associated information.

NAD - M 1 - Name and address

This segment is used to identify the trading partners involved in the Purchase Order Response. Identification of the buyer and supplier of goods and services is mandatory using DE's 3035 and C082. Additional parties can be identified as a clarification or correction to a previously sent Purchase Order or Purchase Order Change Request.

LOC - C 25 - Place/location identification

This segment is used to indicate any location related to the party specified in the NAD segment.

4. Segments Description

FII	- C	5	- Financial institution information The segment is used to identify financial institution information related to the party identified in the NAD segment.
SG4	- C	99	- **RFF** A group of segments giving references only relevant to the specified party rather than the whole order response.
RFF	- M	1	- Reference This segment is used to specify references related to the party specified in the previous NAD segment.
SG6	- C	5	- **CTA-COM** A group of segments giving contact details of the specific person or department within the party identified in the NAD segment.
CTA	- M	1	- Contact information This segment is used to identify contact details for the party specified in the NAD segment.
COM	- C	5	- Communication contact This segment identifies the communications number, and type of communications, for the person or department identified in the preceding CTA segment.
SG7	- C	5	- **TAX-MOA** A group of segments specifying tax related information.
TAX	- M	1	- Duty/tax/fee details This segment is used in the Purchase Order Response to provide a correction or clarification to previously sent tax information.
MOA	- C	1	- Monetary amount This segment is used to indicate tax amounts for the previous TAX segment.
SG8	- C	5	- **CUX-DTM** A group of segments specifying the currencies and related dates/periods valid for the whole order response.
CUX	- M	1	- Currencies This segment is used to specify currency information for the complete purchase order response.
DTM	- C	5	- Date/time/period This segment is used to specify dates related to the previous CUX segment.
SG9	- C	10	- **PAT-DTM-PCD-MOA** A group of segments specifying the terms of payment applicable for the whole order response.
PAT	- M	1	- Payment terms basis This segment is used by the issuer of the order response to indicate terms of payment which are particular to the currently referenced order only.
DTM	- C	5	- Date/time/period This segment is used to specify any dates associated with the payment terms.
PCD	- C	1	- Percentage details This segment is used to specify percentages related to the payment terms.
MOA	- C	1	- Monetary amount This segment is used to specify monetary values related to the payment terms.
SG10	- C	10	- **TDT-SG11** A group of segments identifying the mode and means of transport, location and relevant dates and times for transportation, relating to the whole order response.

4. Segments Description

TDT - M 1 - Details of transport

This segment is used in the Purchase Order Response to provide a change or correction to the transportation information provided in a previous Purchase Order or Purchase Order Change Request.

SG11 - C 10 - **LOC-DTM**

A group of segments giving the location and date/time information relative to the transportation.

LOC - M 1 - Place/location identification

This segment is used to specify any locations related to the TDT segment.

DTM - C 5 - Date/time/period

This segment is used to provide dates related to the transport details specified in the TDT segment.

SG12 - C 5 - **TOD-LOC**

A group of segments indicating the terms of delivery for the whole order response.

TOD - M 1 - Terms of delivery or transport

This segment is used in the Purchase Order Response to provide a change or correction to the terms of delivery information provided in a previous Purchase Order or Purchase Order Change Request.

LOC - C 2 - Place/location identification

This segment is used to identify a location related to the terms of delivery.

SG13 - C 99 - **PAC-MEA-SG14**

A group of segments identifying the packaging, and marks and numbers for goods referenced by the whole order response.

PAC - M 1 - Package

This segment is used to specify the number and type of packages for the whole message.

MEA - C 5 - Measurements

SG14 - C 99 - **PCI-RFF-DTM-GIN**

A group of segments specifying the markings and labels on individual physical units.

PCI - M 1 - Package identification

This segment is used to identify markings on the packaging of the product being invoiced.

RFF - C 1 - Reference

This segment is used to specify any references, which relate to the package identification, e.g. master label number.

DTM - C 5 - Date/time/period

This segment is used to specify dates relating to the references given in the preceding RFF segment.

GIN - C 99 - Goods identity number

This segment is used to provide identification numbers relevant to the packaging unit and level identified in the PAC segment.

SG15 - C 10 - **EQD**

A group of segments providing information relating to equipment identification and ownership, relating to the whole order response.

EQD - M 1 - Equipment details

This segment is used to provide information on equipment which will be used in the despatch of the products ordered.

4. Segments Description

SG19 - C 99 - **ALC-ALI-DTM-SG20-SG21-SG22-SG23-SG24**

A group of segments specifying allowances and charges for the whole order response. Allowances and charges in the heading section of a message are independent from those in the detail section, e.g. ALC at detail level does not override ALC at heading level.

ALC - M 1 - Allowance or charge

This segment is used to specify any allowances or charges related to the complete order response.

ALI - C 5 - Additional information

This segment is used to indicate any special conditions related to the allowances and/or charges specified in the ALC segment.

DTM - C 5 - Date/time/period

This segment is used to indicate any dates related to the allowances or/charges information specified in the ALC segment.

SG20 - C 1 - **QTY-RNG**

A group of segments specifying the quantity of the allowance or charge with its measure unit specifier. A range to which the allowance or charge applies may be specified, e.g. an allowance of a free quantity of 20 pieces may be specified if the goods quantity ordered is greater than 1000 pieces.

QTY - M 1 - Quantity

This segment is used to specify quantity allowance/charge information.

RNG - C 1 - Range details

This segment is used to specify ranges, which apply to the previous QTY segment.

SG21 - C 1 - **PCD-RNG**

A group of segments specifying the percentage for the allowance or charge, e.g. The allowance/charge amount is calculated as 5% of the goods value or a price reduction of 5% may be specified if the goods quantity ordered is within the range 5 tons to 10 tons.

PCD - M 1 - Percentage details

This segment is used to specify percentage allowance/charge information.

RNG - C 1 - Range details

This segment is used to specify ranges, which apply to the previous PCD segment.

SG22 - C 2 - **MOA-RNG**

A group of segments specifying a monetary amount for an allowance or charge. A range to which the allowance or charge applies can be specified, e.g. an allowance of 5000 EUR may be specified if goods value ordered is greater than 100000 EUR.

MOA - M 1 - Monetary amount

This segment is used to specify monetary amount allowance/charge information.

RNG - C 1 - Range details

This segment is used to specify ranges, which apply to the previous MOA segment.

SG23 - C 1 - **RTE-RNG**

A group of segments specifying the rate per unit and basis to which the allowance or charge applies, e.g. The allowance/charge amount is 3 EUR per 10 tons.

RTE - M 1 - Rate details

This segment is used to specify rate allowance/charge information.

RNG - C 1 - Range details

This segment is used to specify ranges, which apply to the previous RTE segment.

SG24 - C 5 - **TAX-MOA**

A group of segments specifying tax related information for the allowance or charge.

4. Segments Description

TAX - M 1 - Duty/tax/fee details

This segment is used to specify tax information related to the allowance or charge information for the full message.

MOA - C 1 - Monetary amount

This segment is used to specify monetary amounts related to the tax segment.

Purchase Order Response Detail Section

SG26 - C 200000 - **LIN-PIA-IMD-MEA-QTY-ALI-DTM-MOA-GIN-QVR-FTX-SG30-SG31-SG32-SG35-SG36-SG37-SG41-SG47**

A group of segments providing details of the individual ordered items. This Segment group may be repeated to give sub-line details.

LIN - M 1 - Line item

This segment is used to identify the product being responded to by means of an GTIN.

PIA - C 25 - Additional product id

This segment is used to specify additional or substitutional item identification codes such as a buyers, or sellers item number.

IMD - C 99 - Item description

This segment is used to describe the current line item.

MEA - C 99 - Measurements

This segment is used to specify the actual physical dimensions of the product being ordered where that product is sold in variable lengths or volumes.

QTY - C 99 - Quantity

This segment is used to specify quantity information related to the current line item.

ALI - C 5 - Additional information

This segment is used to specify any additional information related to the current line item.

DTM - C 35 - Date/time/period

This segment is used to specify any dates related to the current line item.

MOA - C 10 - Monetary amount

This segment can be used for two purposes, firstly, when allowances/charges are involved, to indicate net amounts for the line, and secondly, to provide valuation amounts, e.g., customs value.

GIN - C 1000 - Goods identity number

This segment is used to indicate individual numbers, or a range of numbers, to be printed on coupons or gift cheques.

QVR - C 1 - Quantity variances

This segment is used to specify quantity variances and reasons for variances between what was ordered and what is available as specified in the QTY segment at line level.

FTX - C 99 - Free text

This segment is used to specify any special requirements for the current line item.

SG30 - C 25 - **PRI-CUX-DTM**

A group of segments identifying the relevant pricing information for the goods or services ordered.

PRI - M 1 - Price details

This segment is used to provide price information for the current line item.

4. Segments Description

CUX - C 1 - Currencies

This segment is used to specify currency data related to the previous PRI segment.

DTM - C 5 - Date/time/period

This segment is used to specify the dates (and possibly times) associated with the price of the currently identified product.

SG31 - C 9999 - **RFF-DTM**

A group of segments giving references and where necessary, their dates, relating to the line item.

RFF - M 1 - Reference

This segment is used to specify any references, which are applicable to the current line item only. References stated here will override those specified in the heading section when the same qualifier is used.

DTM - C 5 - Date/time/period

This segment is used to specify dates and times associated with the preceding RFF segment.

SG32 - C 99 - **PAC-MEA-QTY-SG34**

A group of segments identifying the packaging, and marks and numbers for goods referenced in the line item.

PAC - M 1 - Package

This segment is used to indicate the packaging details for the current line item.

MEA - C 5 - Measurements

This segment is used to specify the actual physical dimensions of the product being ordered where that product is sold in variable lengths or volumes.

QTY - C 5 - Quantity

This segment is used to specify the total quantity per pack.

SG34 - C 99 - **PCI-RFF-DTM-GIN**

A group of segments specifying the markings and labels on individual physical units.

PCI - M 1 - Package identification

This segment is used to detail markings and labels on the packaging for the current line item.

RFF - C 1 - Reference

This segment is used to provide references associated with the PCI segment.

DTM - C 5 - Date/time/period

This segment is used to specify dates and times associated with the preceding RFF segment.

GIN - C 99 - Goods identity number

This segment is used to indicate numbers, which are to be marked on the packages for the current line item.

SG35 - C 9999 - **LOC-QTY-DTM**

A group of segments specifying destination and quantity details for consignments involving multi destination deliveries.

LOC - M 1 - Place/location identification

This segment is used to identify the location of delivery for a split delivery order.

QTY - C 1 - Quantity

This segment is used to indicate the delivery quantity for the delivery location specified in the previous LOC segment. The total of all quantities specified in segment group 35 for the line, must equal the value for the total quantity detailed in the QTY segment at line level.

4. Segments Description

DTM - C 5 - Date/time/period

This segment is used to indicate the date, time or period on which the split delivery will take place to the location identified in the LOC segment.

SG36 - C 10 - **TAX-MOA**

A group of segments specifying tax related information.

TAX - M 1 - Duty/tax/fee details

This segment is used to identify the type and rate of tax that is applicable for the current line item. This segment is only used if the tax rate at line level differs from the rate specified in the header section.

MOA - C 1 - Monetary amount

This segment is used to indicate tax amounts related to the preceding TAX segment.

SG37 - C 999 - **NAD-SG40**

A group of segments identifying the parties with associated information, relevant to the line item only.

NAD - M 1 - Name and address

This segment is used to specify the ultimate (end) customer for the current line item, i.e., the party sending the order will in turn sell the goods to, or the party on whose behalf the buyer is acting as an agent.

SG40 - C 5 - **CTA-COM**

A group of segments giving contact details of the specific person or department within the party identified in the NAD segment.

CTA - M 1 - Contact information

This segment is used to provide contact and communications information for the ultimate customer identified in the NAD segment.

COM - C 5 - Communication contact

This segment is used to identify the communications number and the type of communications used for the person or department identified in the CTA segment.

SG41 - C 99 - **ALC-ALI-DTM-SG42-SG43-SG44-SG45-SG46**

A group of segments specifying allowances and charges for the line item. Allowances and charges in the heading section of a message are independent from those in the detail section, e.g. ALC at detail level does not override ALC atheading level.

ALC - M 1 - Allowance or charge

This segment is used to specify any allowances or charges for the current line item.

ALI - C 5 - Additional information

This segment is used to indicate any special conditions related to the allowance and/or charge specified in the ALC segment.

DTM - C 5 - Date/time/period

This segment is used to specify any dates which are related to the allowances and/ or charges detailed in the ALC segment.

SG42 - C 1 - **QTY-RNG**

A group of segments specifying the quantity of the allowance or charge with its measure unit specifier. A range to which the allowance or charge applies may be specified, e.g. an allowance of a free quantity of 20 pieces may be specified if the goods quantity ordered is greater than 1000 pieces.

QTY - M 1 - Quantity

This segment is used to specify quantity allowance/charge information.

RNG - C 1 - Range details

This segment is used to specify ranges, which apply to the previous QTY segment.

4. Segments Description

SG43 - C 1 - **PCD-RNG**

A group of segments specifying the percentage for the allowance or charge, e.g. The allowance/charge amount is calculated as 5% of the goods value or a price reduction of 5% may be specified if the goods quantity ordered is within the range 5 tons to 10 tons.

PCD - M 1 - Percentage details

This segment is used to specify percentage allowance/charge information.

RNG - C 1 - Range details

This segment is used to specify ranges, which apply to the previous PCD segment.

SG44 - C 2 - **MOA-RNG**

A group of segments specifying a monetary amount for an allowance or charge. A range to which the allowance or charge applies can be specified, e.g. an allowance of 5000 EUR may be specified if goods value ordered is greater than 100000 EUR.

MOA - M 1 - Monetary amount

This segment is used to specify monetary amount allowance/charge information.

RNG - C 1 - Range details

This segment is used to specify ranges, which apply to the previous MOA segment.

SG45 - C 1 - **RTE-RNG**

A group of segments specifying the rate per unit and basis to which the allowance or charge applies, e.g. The allowance/charge amount is 3 EUR per 10 tons.

RTE - M 1 - Rate details

This segment is used to specify rate allowance/charge information.

RNG - C 1 - Range details

This segment is used to specify ranges which apply to the previous RTE segment.

SG46 - C 5 - **TAX-MOA**

A group of segments specifying tax related information for the allowance or charge.

TAX - M 1 - Duty/tax/fee details

This segment is used to specify any taxes or duties, which related to the allowance or charge for the current line item.

MOA - C 1 - Monetary amount

This segment is used to specify monetary amounts related to the previous TAX segment.

SG47 - C 10 - **TDT**

A group of segments identifying the mode and means of transport, relating to the line item, where this is different to or not specified within the heading section.

TDT - M 1 - Details of transport

This segment may be used to specify transport information for the current line item, such as requesting an express transport service. It overrides any transport details specified in the TDT segment at the heading level of the message.

Purchase Order Response Summary Section

UNS - M 1 - Section control

This segment is used to separate the detail and summary sections of the message.

MOA - C 12 - Monetary amount

This segment is used to indicate total amounts for the purchase order response.

CNT - C 10 - Control total

This segment is used to provide message control totals.

4. Segments Description

UNT - M 1 - Message trailer

This segment is a mandatory UN/EDIFACT segment. It must always be the last segment in the message.

UNZ - M 1 - Interchange trailer

This segment is used to provide the trailer of an interchange.

5. Segments Layout

This section describes each segment used in the EANCOM® Purchase order response message. The original EDIFACT segment layout is listed. The appropriate comments relevant to the EANCOM® subset are indicated.

Notes:

1. The segments are presented in the sequence in which they appear in the message. The segment or segment group tag is followed by the (M)andatory / (C)onditional indicator, the maximum number of occurrences and the segment description.

2. Reading from left to right, in column one, the data element tags and descriptions are shown, followed by in the second column the EDIFACT status (M or C), the field format, and the picture of the data elements. These first pieces of information constitute the original EDIFACT segment layout.

   Following the EDIFACT information, EANCOM® specific information is provided in the third, fourth, and fifth columns. In the third column a status indicator for the use of (C)onditional EDIFACT data elements (see 2.1 through 2.3 below), in the fourth column the restricted indicator (see point 3 on the following page), and in the fifth column notes and code values used for specific data elements in the message.

2.1 (M)andatory data elements in EDIFACT segments retain their status in EANCOM®.

2.2 Additionally, there are five types of status for data elements with a (C)onditional EDIFACT status, whether for simple, component or composite data elements. These are listed below and can be identified when relevant by the following abbreviations:

- REQUIRED	**R**	Indicates that the entity is required and must be sent.
- ADVISED	**A**	Indicates that the entity is advised or recommended.
- DEPENDENT	**D**	Indicates that the entity must be sent in certain conditions, as defined by the relevant explanatory note.
- OPTIONAL	**O**	Indicates that the entity is optional and may be sent at the discretion of the user.
- NOT USED	**N**	Indicates that the entity is not used and should be omitted.

2.3 If a composite is flagged as **N, NOT USED**, all data elements within that composite will have blank status indicators assigned to them.

3. Status indicators detailed in the fourth column which directly relate to the code values detailed in the fifth **column** may have two values:

- RESTRICTED	*****	A data element marked with an asterisk (*) in the fourth column indicates that the listed codes in column five are the only codes available for use with this data element, in this segment, in this message.
- OPEN		All data elements where coded representation of data is possible and a restricted set of code values is not indicated are open (no asterisk in fourth column). The available codes are listed in the EANCOM® Data Elements and Code Sets Directory. Code values may be given as examples or there may be a note on the format or type of code to be used.

4. Different colours are used for the code values in the segment details: restricted codes are in red and open codes in blue.

5. Segments Layout

Segment number: 1

UNA	- C	1 - Service string advice			
Function: To define the characters selected for use as delimiters and indicators in the rest of the interchange that follows.					
		EDIFACT	GS1	*	Description
UNA1	Component data element separator	M an1	**M**	*	Used as a separator between component data elements contained within a composite data element (default value: ":")
UNA2	Data element separator	M an1	**M**	*	Used to separate two simple or composite data elements (default value: "+")
UNA3	Decimal notation	M an1	**M**	*	Used to indicate the character used for decimal notation (default value:".")
UNA4	Release indicator	M an1	**M**	*	Used to restore any service character to its original specification (value: "?").
UNA5	Reserved for future use	M an1	**M**	*	(default value: space)
UNA6	Segment terminator	M an1	**M**	*	Used to indicate the end of segment data (default value: " ' ")

Segment Notes:

The service string advice shall begin with the upper case characters UNA immediately followed by six characters in the order shown below. The same character shall not be used in more than one position of the UNA.
This segment is used to inform the receiver of the interchange that a set of service string characters which are different to the default characters are being used.
When using the default set of service characters, the UNA segment need not be sent. If it is sent, it must immediately precede the UNB segment and contain the four service string characters (positions UNA1, UNA2, UNA4 and UNA6) selected by the interchange sender.
Regardless of whether or not all of the service string characters are being changed every data element within this segment must be filled, (i.e., if some default values are being used with user defined ones, both the default and user defined values must be specified).
When expressing the service string characters in the UNA segment, it is not necessary to include any element separators.
The use of the UNA segment is required when using a character set other than level A.
UNA:+.? '

5. Segments Layout

Segment number: 2

UNB	- M	1 - Interchange header			
Function: To start, identify and specify an interchange.					
		EDIFACT	GS1	*	Description
S001	SYNTAX IDENTIFIER	M	**M**		See Part I chapter 5.2.7 and segment notes.
0001	Syntax identifier	M a4	**M**	*	UNOA = UN/ECE level A UNOB = UN/ECE level B UNOC = UN/ECE level C UNOD = UN/ECE level D UNOE = UN/ECE level E UNOF = UN/ECE level F
0002	Syntax version number	M n1	**M**	*	3 = Version 3
S002	INTERCHANGE SENDER	M	**M**		
0004	Sender identification	M an..35	**M**		GLN (n13)
0007	Partner identification code qualifier	C an..4	**R**	*	14 = GS1
0008	Address for reverse routing	C an..14	**O**		
S003	INTERCHANGE RECIPIENT	M	**M**		
0010	Recipient identification	M an..35	**M**		GLN (n13)
0007	Partner identification code qualifier	C an..4	**R**	*	14 = GS1
0014	Routing address	C an..14	**O**		
S004	DATE/TIME OF PREPARATION	M	**M**		
0017	Date of preparation	M n6	**M**		YYMMDD
0019	Time of preparation	M n4	**M**		HHMM
0020	Interchange control reference	M an..14	**M**		Unique reference identifying the interchange. Created by the interchange sender.
S005	RECIPIENT'S REFERENCE, PASSWORD	C	**O**		
0022	Recipient's reference/ password	M an..14	**M**		
0025	Recipient's reference/ password qualifier	C an2	**O**		
0026	Application reference	C an..14	**O**		Message identification if the interchange contains only one type of message.
0029	Processing priority code	C a1	**O**		A = Highest priority
0031	Acknowledgement request	C n1	**O**		1 = Requested
0032	Communications agreement ID	C an..35	**O**	*	EANCOM.....
0035	Test indicator	C n1	**O**		1 = Interchange is a test

Segment Notes:

This segment is used to envelope the interchange, as well as to identify both, the party to whom the interchange is sent and the party who has sent the interchange. The principle of the UNB segment is the same as a physical envelope which covers one or more letters or documents, and which details, both the address where delivery is to take place and the address from where the envelope has come.

5. Segments Layout

Segment number: 2

S001: The character encoding specified in basic code table of ISO/IEC 646 (7-bit coded character set for information interchange) shall be used for the interchange service string advice (if used) and up to and including the composite data element S001 'Syntax identifier' in the interchange header. The character repertoire used for the characters in an interchange shall be identified from the code value of data element 0001 in S001 'Syntax identifier' in the interchange header. The character repertoire identified does not apply to objects and/or encrypted data.
The default encoding technique for a particular repertoire shall be the encoding technique defined by its associated character set specification.
DE 0001: The recommended (default) character set for use in EANCOM® for international exchanges is character set A (UNOA). Should users wish to use character sets other than A, an agreement on which set to use should be reached on a bilateral basis before communications begin.
DE 0004, 0008, 0010, 0014, 0042 and 0046: Within EANCOM® the use of the Global Location Number (GLN) is recommended for the identification of the interchange sender and recipient.
DE 0008: Identification (e.g. a division) specified by the sender of the interchange, to be included if agreed, by the recipient in response interchanges, to facilitate internal routing.
DE 0042: Sub-level of sender internal identification, when further sub-level identification is required.
DE 0014: The address for routing, provided beforehand by the interchange recipient, is used by the interchange sender to inform the recipient of the internal address, within the latter's systems, to which the interchange should be routed. It is recommended that the GLN be used for this purpose.
DE 0007: Identification (e.g. a division) specified by the recipient of the interchange, to be included if agreed, by the sender in response interchanges, to facilitate internal routing.
DE 0046: Sub-level of recipient internal identification, when further sub-level identification is required.
DE S004: The date and time specified in this composite should be the date and time at which the interchange sender prepared the interchange. This date and time may not necessarily be the same as the date and time of contained messages.
DE 0020: The interchange control reference number is generated by the interchange sender and is used to identify uniquely each interchange. Should the interchange sender wish to re-use interchange control reference numbers, it is recommended that each number be preserved for at least a period of three months before being re-used. In order to guarantee uniqueness, the interchange control reference number should always be linked to the interchange sender's identification (DE 0004).
DE S005: The use of passwords must first be agreed bilaterally by the parties exchanging the interchange.
DE 0026: This data element is used to identify the application, on the interchange recipient's system, to which the interchange is directed. This data element may only be used if the interchange contains only one type of message, (e.g. only invoices). The reference used in this data element is assigned by the interchange sender.
DE 0031: This data element is used to indicate whether an acknowledgement to the interchange is required. The EANCOM® APERAK or CONTRL message should be used to provide acknowledgement of interchange receipt. In addition, the EANCOM® CONTRL message may be used to indicate when an interchange has been rejected due to syntax errors.
DE 0032: This data element is used to identify any underlying agreements which control the exchange of data. Within EANCOM® , the identity of such agreements must start with the letters 'EANCOM', the remaining characters within the data element being filled according to bilateral agreements.

UNB+UNOA:3+5412345678908:14+8798765432106:14+020102:1000+12345555+++++EANCOMREF 52'

5. Segments Layout

Segment number: 3

UNH - M 1 - Message header

Function:

To head, identify and specify a message.

		EDIFACT	GS1	*	Description
0062	Message reference number	M an..14	**M**		Senders unique message reference. Sequence number of the messages in the interchange. DE 0062 in the UNT will be exactly the same. Sender generated.
S009	MESSAGE IDENTIFIER	M	**M**		
0065	Message type	M an..6	**M**	*	ORDRSP = Purchase order response message
0052	Message version number	M an..3	**M**	*	D = Draft version/UN/EDIFACT Directory
0054	Message release number	M an..3	**M**	*	01B = Release 2001 - B
0051	Controlling agency	M an..2	**M**	*	UN = UN/CEFACT
0057	Association assigned code	C an..6	**R**	*	EAN009 = GS1 version control number (GS1 Permanent Code) Indicates that the message is the EANCOM version 009 of the UNSM Purchase Order Response.
0068	Common access reference	C an..35	**N**		
S010	STATUS OF THE TRANSFER	C	**N**		
0070	Sequence of transfers	M n..2			
0073	First and last transfer	C a1			

Segment Notes:

This segment is used to head, identify and specify a message.
DE's 0065, 0052, 0054, and 0051: Indicate that the message is a UNSM Purchase Order Response based on the D.01B directory under the control of the United Nations.

Example:
UNH+ME000001+ORDRSP:D:01B:UN:EAN009'

5. Segments Layout

Segment number: 4

BGM - M 1 - Beginning of message					
Function: To indicate the type and function of a message and to transmit the identifying number.					
		EDIFACT	GS1	*	Description
C002	DOCUMENT/MESSAGE NAME	C	**R**		
1001	Document name code	C an..3	**R**	*	231 = Purchase order response The Purchase Order Response is transmitted by a supplier in response to a previous Purchase Order or Purchase Order Change Request. All references other than the document number DE 1004 are in the RFF segment.
1131	Code list identification code	C an..17	**N**		
3055	Code list responsible agency code	C an..3	**N**		
1000	Document name	C an..35	**O**		
C106	DOCUMENT/MESSAGE IDENTIFICATION	C	**R**		
1004	Document identifier	C an..35	**R**		Order Response Number assigned by document sender. For global unique identification of documents Global Document Type Identifier (GDTI) is available.
1056	Version identifier	C an..9	**N**		
1060	Revision identifier	C an..6	**O**		
1225	Message function code	C an..3	**R**	*	4 = Change 12 = Not processed 27 = Not accepted 29 = Accepted without amendment 45 = Accepted with reserves When code 45 is used in this position, confirmation is provided at a later stage by issuing a new ORDRSP which once again replies to the original Purchase Order, and also refers to the provisional Purchase Order Response. The message function, coded is a critical element in this segment. The restricted codes detailed in DE 1225 have the following definitions: 4 = Change - The supplier accepts to supply the goods or services requested in the Purchase Order or Purchase Order Change Request, but requires changes to one or more of the items. 12 = Not processed - The supplier informs the buyer that the referenced message has been received but has not yet been processed completely. 27 = Not accepted - The supplier declines to supply the goods detailed in a Purchase Order or Purchase Order Change Request. 29 = Accepted without amendment - The supplier accepts to supply the goods or services requested according to the terms set out in the Purchase Order or Purchase Order Change Request.
4343	Response type code	C an..3	**D**	*	AC = Acknowledge - with detail and change AI = Acknowledge only changes

5. Segments Layout

Segment number: 4

	EDIFACT	GS1	*	Description
				NA = No acknowledgement needed This DE is used if the seller wishes to explicitly indicate whether an acknowledgement is required or not.

Segment Notes:

This segment is used to indicate the type and function of a message and to transmit the identifying number.

Example:
BGM+231+ORSP12856+29'

5. Segments Layout

Segment number: 5

DTM - M 35 - Date/time/period					
Function: To specify date, and/or time, or period.					
		EDIFACT	GS1	*	Description
C507	DATE/TIME/PERIOD	M	**M**		
2005	Date or time or period function code qualifier	M an..3	**M**	*	2 = Delivery date/time, requested 11 = Despatch date and/or time 17 = Delivery date/time, estimated 37 = Ship not before date/time 38 = Ship not later than date/time 61 = Cancel if not delivered by this date 63 = Delivery date/time, latest 64 = Delivery date/time, earliest 69 = Delivery date/time, promised for 71 = Delivery date/time, requested for (after and including) 76 = Delivery date/time, scheduled for 137 = Document/message date/time 200 = Pick-up/collection date/time of cargo 223 = Delivery date/time, deferred 234 = Collection date/time, earliest 255 = Availability due date 263 = Invoicing period 266 = Validation date Code value '266' is used to indicate the date on which the order or order change being responded to was validated. 383 = Cancel if not shipped by this date X14 = Requested for delivery week commencing (GS1 Temporary Code) By including code 234, it will enable the user to support a new concept called Primary Freight, where the buyer is responsible for the pickup of goods from the supplier.This will enable the supplier to specify the earliest time (no earlier than this particular date/time) that thebuyer is allowed to come and pick up the goods by.
2380	Date or time or period value	C an..35	**R**		
2379	Date or time or period format code	C an..3	**R**		102 = CCYYMMDD 203 = CCYYMMDDHHMM 616 = CCYYWW 718 = CCYYMMDD-CCYYMMDD

Segment Notes:

This segment is used to specify dates/times relating to the Purchase Order Response, or if required, dates relating to the delivery or collection of the goods.
DE 2005: Identification of the 'Document/message date/time' (code value 137) is mandatory in an EANCOM message.

Example:
DTM+137:20020830:102'

5. Segments Layout

Segment number: 6

PAI	- C	1 - Payment instructions			
Function: To specify the instructions for payment.					
		EDIFACT	GS1	*	Description
C534	PAYMENT INSTRUCTION DETAILS	M	**M**		
4439	Payment conditions code	C an..3	**O**		1 = Direct payment OA = Open account (GS1 Temporary Code)
4431	Payment guarantee means code	C an..3	**O**		20 = Goods as security
4461	Payment means code	C an..3	**O**		42 = Payment to bank account 60 = Promissory note 70 = Bill drawn by the creditor on the debtor 10E = Payment terms defined in the Commercial Account Summary (GS1 Temporary Code)
1131	Code list identification code	C an..17	**O**		
3055	Code list responsible agency code	C an..3	**D**		
4435	Payment channel code	C an..3	**O**		1 = Ordinary post

Segment Notes:

This segment is used to indicate payment instructions, which may be used or imposed by the party issuing the order.

Example:
PAI+::42'

5. Segments Layout

Segment number: 7

ALI	- C	5 - Additional information			
Function: To indicate that special conditions due to the origin, customs preference, fiscal or commercial factors are applicable.					
		EDIFACT	GS1	*	Description
3239	Country of origin name code	C an..3	**O**		Use ISO 3166 2 alpha code
9213	Duty regime type code	C an..3	**O**		
4183	Special condition code	C an..3	**O**		6 = Subject to bonus 8 = Subject to discount X8 = Provisional (GS1 Temporary Code) When the code X8, Provisional is used in this position, it means that the response provided in DE 1225 of the BGM (e.g. accepted, accepted with amendment, etc) is provisional and which is subject to later confirmation. Confirmation is provided at a later stage by issuing a new ORDRSP which once again replies to the original Purchase Order, and also refers to the provisional Purchase Order Response.
4183	Special condition code	C an..3	**O**		
4183	Special condition code	C an..3	**O**		
4183	Special condition code	C an..3	**O**		
4183	Special condition code	C an..3	**O**		
Segment Notes: This segment is used to specify any additional information related to the complete purchase order response message. Example: ALI+++8'					

5. Segments Layout

Segment number: 8

FTX	- C	99 - Free text			
Function: To provide free form or coded text information.					
		EDIFACT	GS1	*	Description
4451	Text subject code qualifier	M an..3	**M**		PUR = Purchasing information ZZZ = Mutually defined
4453	Free text function code	C an..3	**O**	*	1 = Text for subsequent use 3 = Text for immediate use
C107	TEXT REFERENCE	C	**D**		References to a standard text. This composite is only used when trading partners have agreed to use mutually defined code values.
4441	Free text value code	M an..17	**M**		001 = ...standard text...
1131	Code list identification code	C an..17	**O**		
3055	Code list responsible agency code	C an..3	**D**		91 = Assigned by supplier or supplier's agent 92 = Assigned by buyer or buyer's agent
C108	TEXT LITERAL	C	**D**		This composite is only used if coded text can not be used.
4440	Free text value	M an..512	**M**		
4440	Free text value	C an..512	**O**		
4440	Free text value	C an..512	**O**		
4440	Free text value	C an..512	**O**		
4440	Free text value	C an..512	**O**		
3453	Language name code	C an..3	**D**		ISO 639 two alpha code This data element is only used when non-coded free text has been provided in data element C108.
4447	Free text format code	C an..3	**N**		

Segment Notes:

This segment is used to provide any free text information related to the complete purchase order response message.
Use of this segment in free form is not recommended since it may inhibit automatic processing of the Order Response. Coded references to standard texts is an available functionality which enables automatic processing and reduces transmission and processing overheads. Standard texts should be mutually defined among trading partners and can be used to cover legal and other requirements.

Example:
FTX+ZZZ+1+001::91'

5. Segments Layout

Segment number: 9

SG1	- C	9999	- RFF-DTM
RFF	- M	1	- Reference

Function:

To specify a reference.

		EDIFACT	GS1	*	Description
C506	REFERENCE	M	**M**		
1153	Reference code qualifier	M an..3	**M**		AE = Authorization for expense (AFE) number AKO = Action authorization number ANJ = Authorization number BO = Blanket order number CR = Customer reference number CT = Contract number IA = Internal vendor number IP = Import licence number IT = Internal customer number ON = Order number (buyer) PD = Promotion deal number POR = Purchase order response number PW = Prior purchase order number UC = Ultimate customer's reference number VN = Order number (supplier)
1154	Reference identifier	C an..70	**R**		
1156	Document line identifier	C an..6	**N**		
4000	Reference version identifier	C an..35	**N**		
1060	Revision identifier	C an..6	**O**		

Segment Notes:

This segment is used to refer to the Purchase Order or Purchase Order Change Request to which the Purchase Order Response is responding.
Additionally, further reference can be provided as corrections or clarifications to a previously sent Purchase Order or Purchase Order Change Request. References should normally be given at this point if they apply to all or a majority of the line items.

Example:
RFF+ON:652744'
RFF+PL:AUG1993'

5. Segments Layout

Segment number: 10

SG1	- C	9999	-	RFF-DTM
DTM	- C	5	-	Date/time/period

Function:

To specify date, and/or time, or period.

		EDIFACT	GS1	*	Description
C507	DATE/TIME/PERIOD	M	**M**		
2005	Date or time or period function code qualifier	M an..3	**M**	*	10 = Shipment date/time, requested 171 = Reference date/time 194 = Start date/time 206 = End date/time
2380	Date or time or period value	C an..35	**R**		
2379	Date or time or period format code	C an..3	**R**		102 = CCYYMMDD 203 = CCYYMMDDHHMM

Segment Notes:

This segment is used to specify dates relating to the references given in the preceding RFF segment.

Example:
DTM+171:20020825:102'

5. Segments Layout

Segment number: 11

SG3	- C	99 -	NAD-LOC-FII-SG4-SG6
NAD	- M	1 -	Name and address

Function:

To specify the name/address and their related function, either by C082 only and/or unstructured by C058 or structured by C080 thru 3207.

		EDIFACT	GS1	*	Description
3035	Party function code qualifier	M an..3	**M**		BY = Buyer CS = Consolidator DP = Delivery party IV = Invoicee SN = Store number SR = Supplier's agent/representative SU = Supplier UD = Ultimate customer WH = Warehouse keeper
C082	PARTY IDENTIFICATION DETAILS	C	**A**		
3039	Party identifier	M an..35	**M**		GLN - Format n13
1131	Code list identification code	C an..17	**N**		
3055	Code list responsible agency code	C an..3	**R**	*	9 = GS1
C058	NAME AND ADDRESS	C	**O**		This composite may only be used to fulfill the requirements of directive 2003/58/EC, article 4.
3124	Name and address description	M an..35	**M**		
3124	Name and address description	C an..35	**O**		
3124	Name and address description	C an..35	**O**		
3124	Name and address description	C an..35	**O**		
3124	Name and address description	C an..35	**O**		
C080	PARTY NAME	C	**D**		
3036	Party name	M an..35	**M**		Party Name in clear text.
3036	Party name	C an..35	**O**		
3036	Party name	C an..35	**O**		
3036	Party name	C an..35	**O**		
3036	Party name	C an..35	**O**		
3045	Party name format code	C an..3	**O**		
C059	STREET	C	**D**		
3042	Street and number or post office box identifier	M an..35	**M**		Building Name/Number and Street
3042	Street and number or post office box identifier	C an..35	**O**		Name and/or P.O. Box.
3042	Street and number or post office box identifier	C an..35	**O**		
3042	Street and number or post office box identifier	C an..35	**O**		
3164	City name	C an..35	**D**		City/Town name, clear text
C819	COUNTRY SUB-ENTITY	C	**D**		

5. Segments Layout

Segment number: 11

		EDIFACT	GS1	*	Description
	DETAILS				
3229	Country sub-entity name code	C an..9	**O**		
1131	Code list identification code	C an..17	**O**		
3055	Code list responsible agency code	C an..3	**O**		
3228	Country sub-entity name	C an..70	**O**		County/State, clear text.
3251	Postal identification code	C an..17	**D**		Postal Code
3207	Country name code	C an..3	**D**		ISO 3166 two alpha code

Segment Notes:

This segment is used to identify the trading partners involved in the Purchase Order Response. Identification of the buyer and supplier of goods and services is mandatory using DE's 3035 and C082. Additional parties can be identified as a clarification or correction to a previously sent Purchase Order or Purchase Order Change Request. The delivery address given in NAD at header level is the main delivery address for all line items. It can however be overridden at line level by the use of Segment Group 35 LOC/QTY/DTM to indicate split deliveries.

Example:
NAD+BY+5412345000013::9'
NAD+SU+4012345500004::9'
NAD+DP+5412345000013::9'

Dependency Notes:
The following composites and data elements are only used when a coded name and address can not be used. The affected composites and data elements are as follows:
C080 - C059 - 3164 - C819 - 3251 - 3207

5. Segments Layout

Segment number: 12

SG3	- C	99 -	NAD-LOC-FII-SG4-SG6
LOC	- C	25 -	Place/location identification

Function:

To identify a place or a location and/or related locations.

		EDIFACT	GS1	*	Description
3227	Location function code qualifier	M an..3	**M**	*	7 = Place of delivery
C517	LOCATION IDENTIFICATION	C	**A**		
3225	Location name code	C an..25	**A**		GLN - Format n13
1131	Code list identification code	C an..17	**O**		
3055	Code list responsible agency code	C an..3	**D**		9 = GS1 112 = US, U.S. Census Bureau DE 3055 must be used if DE 3225 is used and does not contain an UN/LOCODE.
3224	Location name	C an..256	**O**		
C519	RELATED LOCATION ONE IDENTIFICATION	C	**N**		
3223	First related location name code	C an..25			
1131	Code list identification code	C an..17			
3055	Code list responsible agency code	C an..3			
3222	First related location name	C an..70			
C553	RELATED LOCATION TWO IDENTIFICATION	C	**N**		
3233	Second related location name code	C an..25			
1131	Code list identification code	C an..17			
3055	Code list responsible agency code	C an..3			
3232	Second related location name	C an..70			
5479	Relation code	C an..3	**N**		

Segment Notes:

This segment is used to indicate any location related to the party specified in the NAD segment.
It is recommended that Global Location Numbers GLN be used for the identification of all locations.

Example:
LOC+7+5412345678908::9'

5. Segments Layout

Segment number: 13

SG3	- C	99 -	NAD-LOC-FII-SG4-SG6
FII	- C	5 -	Financial institution information

Function:

To identify an account and a related financial institution.

		EDIFACT	GS1	*	Description
3035	Party function code qualifier	M an..3	**M**		BF = Beneficiary's bank
C078	ACCOUNT HOLDER IDENTIFICATION	C	**R**		
3194	Account holder identifier	C an..35	**R**		
3192	Account holder name	C an..35	**O**		
3192	Account holder name	C an..35	**O**		
6345	Currency identification code	C an..3	**O**		
C088	INSTITUTION IDENTIFICATION	C	**O**		
3433	Institution name code	C an..11	**A**		
1131	Code list identification code	C an..17	**O**		
3055	Code list responsible agency code	C an..3	**D**		
3434	Institution branch identifier	C an..17	**O**		
1131	Code list identification code	C an..17	**O**		
3055	Code list responsible agency code	C an..3	**D**		
3432	Institution name	C an..70	**O**		
3436	Institution branch location name	C an..70	**O**		
3207	Country name code	C an..3	**O**		

Segment Notes:

The segment is used to identify financial institution information related to the party identified in the NAD segment.

Example:
FII+BF+22098645+KREDBEBB:25:5'

5. Segments Layout

Segment number: 14

SG3	- C	99 -	NAD-LOC-FII-SG4-SG6
SG4	- C	99 -	RFF
RFF	- M	1 -	Reference

Function:

To specify a reference.

		EDIFACT	GS1	*	Description
C506	REFERENCE	M	**M**		
1153	Reference code qualifier	M an..3	**M**		FC = Fiscal number GN = Government reference number IA = Internal vendor number IT = Internal customer number TL = Tax exemption licence number VA = VAT registration number YC1 = Additional party identification (GS1 Temporary Code)
1154	Reference identifier	C an..70	**R**		
1156	Document line identifier	C an..6	**N**		
4000	Reference version identifier	C an..35	**N**		
1060	Revision identifier	C an..6	**N**		

Segment Notes:

This segment is used to specify references related to the party specified in the previous NAD segment.

Example:
RFF+VA:87765432'

5. Segments Layout

Segment number: 15

SG3	- C	99 -	NAD-LOC-FII-SG4-SG6
SG6	- C	5 -	CTA-COM
CTA	- M	1 -	Contact information

Function:

To identify a person or a department to whom communication should be directed.

		EDIFACT	GS1	*	Description
3139	Contact function code	C an..3	**R**		IC = Information contact OC = Order contact PD = Purchasing contact SR = Sales representative or department
C056	DEPARTMENT OR EMPLOYEE DETAILS	C	**O**		
3413	Department or employee name code	C an..17	**O**		
3412	Department or employee name	C an..35	**O**		

Segment Notes:

This segment is used to identify contact details for the party specified in the NAD segment.
The Global Location Number GLN - Format n13 - is particularly suitable for this purpose.

Example:
CTA+OC+:P FORGET'

5. Segments Layout

Segment number: 16

SG3	- C	99 -	NAD-LOC-FII-SG4-SG6
SG6	- C	5 -	CTA-COM
COM	- C	5 -	Communication contact

Function:

To identify a communication number of a department or a person to whom communication should be directed.

		EDIFACT	GS1	*	Description
C076	COMMUNICATION CONTACT	M	**M**		
3148	Communication address identifier	M an..512	**M**		
3155	Communication address code qualifier	M an..3	**M**		AO = Uniform Resource Location (URL) EM = Electronic mail TE = Telephone

Segment Notes:

This segment identifies the communications number, and type of communications, for the person or department identified in the preceding CTA segment.

Example:
COM+0044715632478:TE'

5. Segments Layout

Segment number: 17

SG7	- C	5 - TAX-MOA
TAX	- M	1 - Duty/tax/fee details

Function:

To specify relevant duty/tax/fee information.

		EDIFACT	GS1	*	Description
5283	Duty or tax or fee function code qualifier	M an..3	**M**		5 = Customs duty 7 = Tax
C241	DUTY/TAX/FEE TYPE	C	**D**		
5153	Duty or tax or fee type name code	C an..3	**O**		GST = Goods and services tax VAT = Value added tax
1131	Code list identification code	C an..17	**O**		
3055	Code list responsible agency code	C an..3	**D**		
5152	Duty or tax or fee type name	C an..35	**O**		
C533	DUTY/TAX/FEE ACCOUNT DETAIL	C	**O**		
5289	Duty or tax or fee account code	M an..6	**M**		
1131	Code list identification code	C an..17	**O**		
3055	Code list responsible agency code	C an..3	**D**		
5286	Duty or tax or fee assessment basis value	C an..15	**O**		
C243	DUTY/TAX/FEE DETAIL	C	**A**		
5279	Duty or tax or fee rate code	C an..7	**O**		
1131	Code list identification code	C an..17	**O**		
3055	Code list responsible agency code	C an..3	**D**		
5278	Duty or tax or fee rate	C an..17	**R**		
5273	Duty or tax or fee rate basis code	C an..12	**O**		
1131	Code list identification code	C an..17	**O**		
3055	Code list responsible agency code	C an..3	**D**		
5305	Duty or tax or fee category code	C an..3	**A**		A = Mixed tax rate E = Exempt from tax S = Standard rate
3446	Party tax identifier	C an..20	**O**		
1227	Calculation sequence code	C an..3	**N**		

Segment Notes:

This segment is used in the Purchase Order Response to provide a correction or clarification to previously sent tax information.

Example:
TAX+7+VAT+++:::21+S'

Dependency Notes:

5. Segments Layout

Segment number: 17

DE C241 and 5305: Tax types and categories will vary from country to country. They should be defined by national guidelines.

5. Segments Layout

Segment number: 18

SG7	- C	5 -	TAX-MOA
MOA	- C	1 -	Monetary amount

Function:

To specify a monetary amount.

		EDIFACT	GS1	*	Description
C516	MONETARY AMOUNT	M	**M**		
5025	Monetary amount type code qualifier	M an..3	**M**		124 = Tax amount 125 = Taxable amount
5004	Monetary amount	C n..35	**R**		
6345	Currency identification code	C an..3	**N**		
6343	Currency type code qualifier	C an..3	**N**		
4405	Status description code	C an..3	**N**		

Segment Notes:

This segment is used to indicate tax amounts for the previous TAX segment.

Example:
MOA+124:154.54'

5. Segments Layout

Segment number: 19

SG8	- C	5 -	CUX-DTM
CUX	- M	1 -	Currencies

Function:

To specify currencies used in the transaction and relevant details for the rate of exchange.

		EDIFACT	GS1	*	Description
C504	CURRENCY DETAILS	C	**R**		
6347	Currency usage code qualifier	M an..3	**M**	*	2 = Reference currency
6345	Currency identification code	C an..3	**R**		ISO 4217 three alpha
6343	Currency type code qualifier	C an..3	**R**	*	4 = Invoicing currency 9 = Order currency 10 = Pricing currency 11 = Payment currency 12 = Quotation currency
6348	Currency rate value	C n..4	**N**		
C504	CURRENCY DETAILS	C	**D**		The second occurrence of this composite is only used if a target currency is being specified.
6347	Currency usage code qualifier	M an..3	**M**	*	3 = Target currency
6345	Currency identification code	C an..3	**R**		ISO 4217 three alpha
6343	Currency type code qualifier	C an..3	**R**	*	4 = Invoicing currency 9 = Order currency 10 = Pricing currency 11 = Payment currency 12 = Quotation currency
6348	Currency rate value	C n..4	**O**		
5402	Currency exchange rate	C n..12	**D**		The rate of exchange is only used if a target currency has been identified in the second occurrence of C504.
6341	Exchange rate currency market identifier	C an..3	**N**		

Segment Notes:

This segment is used to specify currency information for the complete purchase order response.
The CUX segment is mandatory for international exchanges.
This segment is not usually sent in the Purchase Order Response unless it provides a corrections or clarification to the currency information provided in a previous Purchase Order or Purchase Order Change Request.
When specifying Reference and Target Currencies for international trade, one occurrence of CUX is all that is required. The reference currency is identified in the first occurrence of composite C504, with the target currency specified in the second occurrence of C504. The rate of exchange between the two is detailed in DE 5402.

Example:
CUX+2:EUR:9'
CUX+2:EUR:9+3:USD:4+0.90243'

5. Segments Layout

Segment number: 20

SG8	- C	5 -	CUX-DTM
DTM	- C	5 -	Date/time/period

Function:

To specify date, and/or time, or period.

		EDIFACT	GS1	*	Description
C507	DATE/TIME/PERIOD	M	**M**		
2005	Date or time or period function code qualifier	M an..3	**M**	*	134 = Rate of exchange date/time 194 = Start date/time 206 = End date/time
2380	Date or time or period value	C an..35	**R**		
2379	Date or time or period format code	C an..3	**R**		102 = CCYYMMDD 203 = CCYYMMDDHHMM 718 = CCYYMMDD-CCYYMMDD

Segment Notes:

This segment is used to specify dates related to the previous CUX segment.

Example:
DTM+134:20020901:102'

5. Segments Layout

Segment number: 21

SG9	- C	10 -	PAT-DTM-PCD-MOA
PAT	- M	1 -	Payment terms basis

Function:

To specify the payment terms basis.

Notes:
1. This segment will be removed effective with directory D.02B.

		EDIFACT	GS1	*	Description
4279	Payment terms type code qualifier	M an..3	**M**		1 = Basic 2 = End of month 3 = Fixed date 4 = Deferred 5 = Discount not applicable 6 = Mixed 7 = Extended 8 = Basic discount offered 9 = Proximo 10 = Instant 11 = Elective 12 = 10 days after end of month 18 = Previously agreed upon 20 = Penalty terms 22 = Discount
C110	PAYMENT TERMS	C	**O**		
4277	Payment terms description identifier	M an..17	**M**		1 = Draft(s) drawn on issuing bank 2 = Draft(s) drawn on advising bank 3 = Draft(s) drawn on reimbursing bank 4 = Draft(s) drawn on applicant 5 = Draft(s) drawn on any other drawee 6 = No drafts
1131	Code list identification code	C an..17	**O**		
3055	Code list responsible agency code	C an..3	**D**		91 = Assigned by supplier or supplier's agent 92 = Assigned by buyer or buyer's agent ZZZ = Mutually defined
4276	Payment terms description	C an..35	**O**		
4276	Payment terms description	C an..35	**O**		
C112	TERMS/TIME INFORMATION	C	**O**		
2475	Time reference code	M an..3	**M**		5 = Date of invoice 66 = Specified date 81 = Date of shipment as evidenced by the transport document(s)
2009	Terms time relation code	C an..3	**O**		3 = After reference
2151	Period type code	C an..3	**O**		D = Day M = Month Y = Year
2152	Period count quantity	C n..3	**O**		Number of periods for payment.

Segment Notes:

This segment is used by the issuer of the order response to indicate terms of payment which are particular to the currently referenced order only.

Example:

5. Segments Layout

Segment number: 21

PAT+22++5:3:D:20' This example indicates discount payment terms with payment due 20 days after the reference date, which in this case is the invoice date.

5. Segments Layout

Segment number: 22

SG9	- C	10 -	PAT-DTM-PCD-MOA
DTM	- C	5 -	Date/time/period

Function:

To specify date, and/or time, or period.

		EDIFACT	GS1	*	Description
C507	DATE/TIME/PERIOD	M	**M**		
2005	Date or time or period function code qualifier	M an..3	**M**	*	7 = Effective date/time 12 = Terms discount due date/time 13 = Terms net due date 209 = Value date 531 = Payment period
2380	Date or time or period value	C an..35	**R**		
2379	Date or time or period format code	C an..3	**R**		102 = CCYYMMDD 718 = CCYYMMDD-CCYYMMDD

Segment Notes:

This segment is used to specify any dates associated with the payment terms.

Example:
DTM+13:20020331:102'
Net due date for payment is the 31st of March 2002.

5. Segments Layout

Segment number: 23

SG9	- C	10 -	PAT-DTM-PCD-MOA
PCD	- C	1 -	Percentage details

Function:

To specify percentage information.

		EDIFACT	GS1	*	Description
C501	PERCENTAGE DETAILS	M	**M**		
5245	Percentage type code qualifier	M an..3	**M**		12 = Discount 15 = Penalty percentage 16 = Interest percentage
5482	Percentage	C n..10	**R**		
5249	Percentage basis identification code	C an..3	**O**		1 = Per unit 13 = Invoice value
1131	Code list identification code	C an..17	**O**		
3055	Code list responsible agency code	C an..3	**D**		
4405	Status description code	C an..3	**N**		

Segment Notes:

This segment is used to specify percentages related to the payment terms.

Example:
PCD+15:2.5:13'

5. Segments Layout

Segment number: 24

SG9	- C	10 -	PAT-DTM-PCD-MOA
MOA	- C	1 -	Monetary amount

Function:

To specify a monetary amount.

		EDIFACT	GS1	*	Description
C516	MONETARY AMOUNT	M	**M**		
5025	Monetary amount type code qualifier	M an..3	**M**		21 = Cash discount 23 = Charge amount
5004	Monetary amount	C n..35	**R**		Actual value being charged/discounted.
6345	Currency identification code	C an..3	**N**		
6343	Currency type code qualifier	C an..3	**N**		
4405	Status description code	C an..3	**N**		

Segment Notes:

This segment is used to specify monetary values related to the payment terms.

Example:
MOA+21:100'

5. Segments Layout

Segment number: 25

SG10	- C	10 -	TDT-SG11
TDT	- M	1 -	Details of transport

Function:

To specify the transport details such as mode of transport, means of transport, its conveyance reference number and the identification of the means of transport.

		EDIFACT	GS1	*	Description
8051	Transport stage code qualifier	M an..3	**M**		20 = Main-carriage transport
8028	Means of transport journey identifier	C an..17	**O**		Reference Number covering the transport.
C220	MODE OF TRANSPORT	C	**A**		
8067	Transport mode name code	C an..3	**R**		
8066	Transport mode name	C an..17	**N**		
C228	TRANSPORT MEANS	C	**O**		
8179	Transport means description code	C an..8	**D**		12 = Ship tanker 23 = Rail bulk car 31 = Truck 32 = Road tanker
8178	Transport means description	C an..17	**D**		
C040	CARRIER	C	**O**		
3127	Carrier identifier	C an..17	**A**		GLN - Format n13
1131	Code list identification code	C an..17	**O**		
3055	Code list responsible agency code	C an..3	**D**		9 = GS1
3128	Carrier name	C an..35	**O**		
8101	Transit direction indicator code	C an..3	**O**		BS = Buyer to supplier SB = Supplier to buyer
C401	EXCESS TRANSPORTATION INFORMATION	C	**N**		
8457	Excess transportation reason code	M an..3			
8459	Excess transportation responsibility code	M an..3			
7130	Customer shipment authorisation identifier	C an..17			
C222	TRANSPORT IDENTIFICATION	C	**O**		
8213	Transport means identification name identifier	C an..9	**O**		
1131	Code list identification code	C an..17	**O**		
3055	Code list responsible agency code	C an..3	**D**		DE 3055 must be used if DE 8213 is used.
8212	Transport means identification name	C an..35	**R**		Vehicle license plate/Aircraft number.
8453	Transport means nationality code	C an..3	**O**		ISO 3166 two alpha code
8281	Transport means ownership	C an..3	**N**		

5. Segments Layout

Segment number: 25

	EDIFACT	GS1	*	Description
indicator code				

Segment Notes:

This segment is used in the Purchase Order Response to provide a change or correction to the transportation information provided in a previous Purchase Order or Purchase Order Change Request.
The TDT segment can be used to specify transport instructions for the whole Purchase Order Response, such as requesting an express transport service.

Example:
TDT+20++30+31'

Dependency Notes:
Data Elements 8179 and 8178 are only used when the type of transport must be specifically identified, that is, a generic description such as road transport is unsuitable.

5. Segments Layout

Segment number: 26

SG10	- C	10 -	TDT-SG11
SG11	- C	10 -	LOC-DTM
LOC	- M	1 -	Place/location identification

Function:

To identify a place or a location and/or related locations.

		EDIFACT	GS1	*	Description
3227	Location function code qualifier	M an..3	**M**		24 = Port of entry
C517	LOCATION IDENTIFICATION	C	**A**		
3225	Location name code	C an..25	**A**		GLN - Format n13
1131	Code list identification code	C an..17	**O**		
3055	Code list responsible agency code	C an..3	**D**		9 = GS1 112 = US, U.S. Census Bureau DE 3055 must be used if DE 3225 is used and does not contain an UN/LOCODE.
3224	Location name	C an..256	**O**		
C519	RELATED LOCATION ONE IDENTIFICATION	C	**N**		
3223	First related location name code	C an..25			
1131	Code list identification code	C an..17			
3055	Code list responsible agency code	C an..3			
3222	First related location name	C an..70			
C553	RELATED LOCATION TWO IDENTIFICATION	C	**N**		
3233	Second related location name code	C an..25			
1131	Code list identification code	C an..17			
3055	Code list responsible agency code	C an..3			
3232	Second related location name	C an..70			
5479	Relation code	C an..3	**N**		

Segment Notes:

This segment is used to specify any locations related to the TDT segment.
For the identification of locations it is recommended to use Global Location Numbers GLN.

Example:
LOC+24+5412345678908::9'

5. Segments Layout

Segment number: 27

SG10	- C	10 -	TDT-SG11
SG11	- C	10 -	LOC-DTM
DTM	- C	5 -	Date/time/period

Function:

To specify date, and/or time, or period.

		EDIFACT	GS1	*	Description
C507	DATE/TIME/PERIOD	M	**M**		
2005	Date or time or period function code qualifier	M an..3	**M**	*	189 = Departure date/time, scheduled 232 = Arrival date/time, scheduled
2380	Date or time or period value	C an..35	**R**		
2379	Date or time or period format code	C an..3	**R**		102 = CCYYMMDD 203 = CCYYMMDDHHMM 718 = CCYYMMDD-CCYYMMDD

Segment Notes:

This segment is used to provide dates related to the transport details specified in the TDT segment.

Example:
DTM+232:20020331:102'

5. Segments Layout

Segment number: 28

SG12	- C	5 -	TOD-LOC
TOD	- M	1 -	Terms of delivery or transport

Function:

To specify terms of delivery or transport.

		EDIFACT	GS1	*	Description
4055	Delivery or transport terms function code	C an..3	**R**		3 = Price and despatch condition 6 = Delivery condition
4215	Transport charges payment method code	C an..3	**O**		MX = Mixed PO = Prepaid only
C100	TERMS OF DELIVERY OR TRANSPORT	C	**A**		
4053	Delivery or transport terms description code	C an..3	**O**		INCOTERMS (See EANCOM Codes Set) If INCOTERMS are applicable, then DE 3055 has to contain code value "9" and DE 1131 must be used.
1131	Code list identification code	C an..17	**D**		
3055	Code list responsible agency code	C an..3	**D**		Data elements 1131 and 3055 are only used if specific terms of delivery codes, which are outside those recommended by EDIFACT, are being used.
4052	Delivery or transport terms description	C an..70	**O**		
4052	Delivery or transport terms description	C an..70	**O**		

Segment Notes:

This segment is used in the Purchase Order Response to provide a change or correction to the terms of delivery information provided in a previous Purchase Order or Purchase Order Change Request.

Example:
TOD+3++CIF:2E:9'

5. Segments Layout

Segment number: 29

SG12	- C	5 -	TOD-LOC
LOC	- C	2 -	Place/location identification

Function:

To identify a place or a location and/or related locations.

		EDIFACT	GS1	*	Description
3227	Location function code qualifier	M an..3	**M**		1 = Place of terms of delivery
C517	LOCATION IDENTIFICATION	C	**A**		
3225	Location name code	C an..25	**A**		UN/LOCODES
1131	Code list identification code	C an..17	**O**		
3055	Code list responsible agency code	C an..3	**D**		3 = IATA (International Air Transport Association) DE 3055 must be used if DE 3225 is used and does not contain an UN/LOCODE.
3224	Location name	C an..256	**O**		
C519	RELATED LOCATION ONE IDENTIFICATION	C	**N**		
3223	First related location name code	C an..25			
1131	Code list identification code	C an..17			
3055	Code list responsible agency code	C an..3			
3222	First related location name	C an..70			
C553	RELATED LOCATION TWO IDENTIFICATION	C	**N**		
3233	Second related location name code	C an..25			
1131	Code list identification code	C an..17			
3055	Code list responsible agency code	C an..3			
3232	Second related location name	C an..70			
5479	Relation code	C an..3	**N**		

Segment Notes:

This segment is used to identify a location related to the terms of delivery.

Example:
LOC+1+BE-BRU'

5. Segments Layout

Segment number: 30

SG13	- C	99 -	PAC-MEA-SG14
PAC	- M	1 -	Package

Function:

To describe the number and type of packages/physical units.

		EDIFACT	GS1	*	Description
7224	Package quantity	C n..8	**O**		
C531	PACKAGING DETAILS	C	**A**		
7075	Packaging level code	C an..3	**N**		
7233	Packaging related description code	C an..3	**O**		50 = Package barcoded EAN-13 or EAN-8 51 = Package barcoded ITF-14 52 = Package barcoded UCC or EAN-128
7073	Packaging terms and conditions code	C an..3	**O**		1 = Packaging cost paid by supplier 2 = Packaging cost paid by recipient 3 = Packaging cost not charged (returnable)
C202	PACKAGE TYPE	C	**O**		
7065	Package type description code	C an..17	**R**		
1131	Code list identification code	C an..17	**O**		
3055	Code list responsible agency code	C an..3	**D**		9 = GS1 Code 9 in this data element is used only when GS1 codes are used in DE 7065.
7064	Type of packages	C an..35	**O**		
C402	PACKAGE TYPE IDENTIFICATION	C	**N**		
7077	Description format code	M an..3			
7064	Type of packages	M an..35			
7143	Item type identification code	C an..3			
7064	Type of packages	C an..35			
7143	Item type identification code	C an..3			
C532	RETURNABLE PACKAGE DETAILS	C	**D**		Composite C532 is only used where the packaging being described is returnable. This composite identifies who is responsible for payment of its return.
8395	Returnable package freight payment responsibility code	C an..3	**O**		1 = Paid by customer 2 = Free 3 = Paid by supplier
8393	Returnable package load contents code	C an..3	**N**		

Segment Notes:

This segment is used to specify the number and type of packages for the whole message.

Example:
PAC+10++CS'
PAC+22++09'

5. Segments Layout

Segment number: 31

SG13	- C	99 -	PAC-MEA-SG14
MEA	- C	5 -	Measurements

Function:

To specify physical measurements, including dimension tolerances, weights and counts.

		EDIFACT	GS1	*	Description
6311	Measurement purpose code qualifier	M an..3	**M**		CT = Counts
C502	MEASUREMENT DETAILS	C	**C**		
6313	Measured attribute code	C an..3	**C**		NPP = Number of pallet places (GS1 Temporary Code)
6321	Measurement significance code	C an..3	**N**		
6155	Non-discrete measurement name code	C an..17	**N**		
6154	Non-discrete measurement name	C an..70	**N**		
C174	VALUE/RANGE	C	**C**		
6411	Measurement unit code	M an..3	**M**		
6314	Measurement value	C an..18	**O**		
6162	Range minimum value	C n..18	**N**		
6152	Range maximum value	C n..18	**N**		
6432	Significant digits quantity	C n..2	**N**		
7383	Surface or layer code	C an..3	**N**		

Segment Notes:

This segment is used to provide measurements of the units described in the PAC segment.

Example:
MEA+CT+NPP+NAR:12'
Equipment includes a total of 22 pallets, occupying 12 pallet places.

5. Segments Layout

Segment number: 32

SG13	- C	99 -	PAC-MEA-SG14
SG14	- C	99 -	PCI-RFF-DTM-GIN
PCI	- M	1 -	Package identification

Function:

To specify markings and labels on individual packages or physical units.

		EDIFACT	GS1	*	Description
4233	Marking instructions code	C an..3	**R**		16 = Buyer's instructions 39 = Marked with Serial Shipping Container Code (SSCC)
C210	MARKS & LABELS	C	**O**		
7102	Shipping marks description	M an..35	**M**		
7102	Shipping marks description	C an..35	**O**		
7102	Shipping marks description	C an..35	**O**		
7102	Shipping marks description	C an..35	**O**		
7102	Shipping marks description	C an..35	**O**		
7102	Shipping marks description	C an..35	**O**		
7102	Shipping marks description	C an..35	**O**		
7102	Shipping marks description	C an..35	**O**		
7102	Shipping marks description	C an..35	**O**		
7102	Shipping marks description	C an..35	**O**		
8275	Container or package contents indicator code	C an..3	**N**		
C827	TYPE OF MARKING	C	**N**		
7511	Marking type code	M an..3			
1131	Code list identification code	C an..17			
3055	Code list responsible agency code	C an..3			

Segment Notes:

This segment is used to identify markings on the packaging of the product being invoiced.

Example:
PCI+39'

5. Segments Layout

Segment number: 33

SG13	- C	99 -	PAC-MEA-SG14
SG14	- C	99 -	PCI-RFF-DTM-GIN
RFF	- C	1 -	Reference

Function:

To specify a reference.

		EDIFACT	GS1	*	Description
C506	REFERENCE	M	**M**		
1153	Reference code qualifier	M an..3	**M**		AAT = Master label number PK = Packing list number
1154	Reference identifier	C an..70	**R**		
1156	Document line identifier	C an..6	**N**		
4000	Reference version identifier	C an..35	**N**		
1060	Revision identifier	C an..6	**N**		

Segment Notes:

This segment is used to specify any references, which relate to the package identification, e.g. master label number.

Example:
RFF+AAT:9677'

5. Segments Layout

Segment number: 34

SG13	- C	99 -	PAC-MEA-SG14
SG14	- C	99 -	PCI-RFF-DTM-GIN
DTM	- C	5 -	Date/time/period

Function:

To specify date, and/or time, or period.

		EDIFACT	GS1	*	Description
C507	DATE/TIME/PERIOD	M	**M**		
2005	Date or time or period function code qualifier	M an..3	**M**	*	171 = Reference date/time
2380	Date or time or period value	C an..35	**R**		
2379	Date or time or period format code	C an..3	**R**		102 = CCYYMMDD

Segment Notes:

This segment is used to specify dates relating to the references given in the preceding RFF segment.

Example:
DTM+171:20011101:102'

5. Segments Layout

Segment number: 35

SG13	- C	99 -	PAC-MEA-SG14
SG14	- C	99 -	PCI-RFF-DTM-GIN
GIN	- C	99 -	Goods identity number

Function:

To give specific identification numbers, either as single numbers or ranges.

		EDIFACT	GS1	*	Description
7405	Object identification code qualifier	M an..3	**M**		AW = Serial shipping container code BJ = Serial shipping container code BX = Batch number SRV = GS1 Global Trade Item Number (GS1 Temporary Code)
C208	IDENTITY NUMBER RANGE	M	**M**		
7402	Object identifier	M an..35	**M**		
7402	Object identifier	C an..35	**O**		
C208	IDENTITY NUMBER RANGE	C	**O**		
7402	Object identifier	M an..35	**M**		
7402	Object identifier	C an..35	**O**		
C208	IDENTITY NUMBER RANGE	C	**O**		
7402	Object identifier	M an..35	**M**		
7402	Object identifier	C an..35	**O**		
C208	IDENTITY NUMBER RANGE	C	**O**		
7402	Object identifier	M an..35	**M**		
7402	Object identifier	C an..35	**O**		
C208	IDENTITY NUMBER RANGE	C	**O**		
7402	Object identifier	M an..35	**M**		
7402	Object identifier	C an..35	**O**		

Segment Notes:

This segment is used to provide identification numbers relevant to the packaging unit and level identified in the PAC segment.
In EANCOM it is recommended to use the Serial Shipping Container Code (SSCC) for unique identification of individual transport packages.

Example:
GIN+AW+354123450000000014:354123450000000106'

5. Segments Layout

Segment number: 36

SG15	- C	10 -	EQD
EQD	- M	1 -	Equipment details

Function:

To identify a unit of equipment.

		EDIFACT	GS1	*	Description
8053	Equipment type code qualifier	M an..3	**M**		CN = Container
C237	EQUIPMENT IDENTIFICATION	C	**N**		
8260	Equipment identifier	C an..17			
1131	Code list identification code	C an..17			
3055	Code list responsible agency code	C an..3			
3207	Country name code	C an..3			
C224	EQUIPMENT SIZE AND TYPE	C	**O**		
8155	Equipment size and type description code	C an..10	**O**		
1131	Code list identification code	C an..17	**O**		
3055	Code list responsible agency code	C an..3	**D**		
8154	Equipment size and type description	C an..35	**O**		
8077	Equipment supplier code	C an..3	**N**		
8249	Equipment status code	C an..3	**N**		
8169	Full or empty indicator code	C an..3	**N**		

Segment Notes:

This segment is used to provide information on equipment which will be used in the despatch of the products ordered.

Example:
EQD+CN'

5. Segments Layout

Segment number: 37

SG19	- C	99 -	ALC-ALI-DTM-SG20-SG21-SG22-SG23-SG24
ALC	- M	1 -	Allowance or charge

Function:

To identify allowance or charge details.

		EDIFACT	GS1	*	Description
5463	Allowance or charge code qualifier	M an..3	**M**		A = Allowance C = Charge N = No allowance or charge
C552	ALLOWANCE/CHARGE INFORMATION	C	**O**		
1230	Allowance or charge identifier	C an..35	**D**		If code '69' is used in DE 5189, the agreement number must be specified in DE 1230.
5189	Allowance or charge identification code	C an..3	**O**		1 = Handling commission 32 = Courier fee 69 = Charge for a customer specific finish
4471	Settlement means code	C an..3	**O**		3 = Vendor check/cheque to customer 5 = Charge to be paid by vendor 6 = Charge to be paid by customer
1227	Calculation sequence code	C an..3	**D**		1 = First step of calculation 2 = Second step of calculation etc, etc, etc..... 9 = Ninth step of calculation The calculation sequence indicator is used when multiple allowances and/or charges are applicable. If various allowances and/or charges percentages, quantities, monetary amounts or rates are applicable to the same base price, then the calculation sequence indicator will always equal one.
C214	SPECIAL SERVICES IDENTIFICATION	C	**D**		This composite is only used if the buyer knows the type of allowance or charge.
7161	Special service description code	C an..3	**R**		DDA = Dealer discount/allowance (GS1 Temporary Code) DDA - A discount is a reduction in price of an item offered on a one off basis. An important distinction to make between a discount and an allowance is that an allowance is a reduction which is offered on a regular basis. TD = Trade discount X40 = Allowance/charge regulated by law (GS1 Temporary Code)
1131	Code list identification code	C an..17	**O**		
3055	Code list responsible agency code	C an..3	**D**	*	9 = GS1 This data element is only used if an GS1 code is used in data element 7161.
7160	Special service description	C an..35	**O**		
7160	Special service description	C an..35	**O**		

Segment Notes:

This segment is used to specify any allowances or charges related to the complete order response.
As the calculation price type (data element 5125 PRI segment) used in the purchase order is always a net price, allowances and/or charges specified in the ALC segment are for information purposes only.
If the various allowances and/or charges are applied against a fluctuating price (constantly because of the

5. Segments Layout

Segment number: 37

application of other allowances and/or charges) then the sequence of calculation is indicated using this data element.

Example:
ALC+A+++1'

5. Segments Layout

Segment number: 38

SG19	- C	99 -	ALC-ALI-DTM-SG20-SG21-SG22-SG23-SG24
ALI	- C	5 -	Additional information

Function:

To indicate that special conditions due to the origin, customs preference, fiscal or commercial factors are applicable.

		EDIFACT	GS1	*	Description
3239	Country of origin name code	C an..3	**O**		Use ISO 3166 two alpha
9213	Duty regime type code	C an..3	**O**		1 = Origin subject to EC/EFTA preference 2 = Origin subject to other preference agreement
4183	Special condition code	C an..3	**O**		6 = Subject to bonus 8 = Subject to discount
4183	Special condition code	C an..3	**O**		
4183	Special condition code	C an..3	**O**		
4183	Special condition code	C an..3	**O**		
4183	Special condition code	C an..3	**O**		

Segment Notes:

This segment is used to indicate any special conditions related to the allowances and/or charges specified in the ALC segment.

Example:
ALI+++8'

5. Segments Layout

Segment number: 39

SG19	- C	99 -	ALC-ALI-DTM-SG20-SG21-SG22-SG23-SG24
DTM	- C	5 -	Date/time/period

Function:

To specify date, and/or time, or period.

		EDIFACT	GS1	*	Description
C507	DATE/TIME/PERIOD	M	**M**		
2005	Date or time or period function code qualifier	M an..3	**M**	*	194 = Start date/time 206 = End date/time
2380	Date or time or period value	C an..35	**R**		
2379	Date or time or period format code	C an..3	**R**		102 = CCYYMMDD 203 = CCYYMMDDHHMM

Segment Notes:

This segment is used to indicate any dates related to the allowances or/charges information specified in the ALC segment.

Example:
DTM+194:20021101:102'
DTM+206:20021115:102'
This example indicates that the allowances and/or charges are start on the 1st of November 2002 and finish on the 15th of November 2002.

5. Segments Layout

Segment number: 40

SG19	- C	99 -	ALC-ALI-DTM-SG20-SG21-SG22-SG23-SG24
SG20	- C	1 -	QTY-RNG
QTY	- M	1 -	Quantity

Function:

To specify a pertinent quantity.

		EDIFACT	GS1	*	Description
C186	QUANTITY DETAILS	M	**M**		
6063	Quantity type code qualifier	M an..3	**M**	*	1 = Discrete quantity
6060	Quantity	M an..35	**M**		
6411	Measurement unit code	C an..3	**D**		This data element is only used if the current product is of variable quantity.

Segment Notes:

This segment is used to specify quantity allowance/charge information.

Example:
QTY+1:14'

5. Segments Layout

Segment number: 41

SG19	- C	99 -	ALC-ALI-DTM-SG20-SG21-SG22-SG23-SG24
SG20	- C	1 -	QTY-RNG
RNG	- C	1 -	Range details

Function:

To identify a range.

		EDIFACT	GS1	*	Description
6167	Range type code qualifier	M an..3	**M**		1 = Allowance range 2 = Charge range
C280	RANGE	C	**R**		
6411	Measurement unit code	M an..3	**M**		
6162	Range minimum value	C n..18	**O**		
6152	Range maximum value	C n..18	**O**		

Segment Notes:

This segment is used to specify ranges, which apply to the previous QTY segment.

Example:
RNG+1+KGM:15'

5. Segments Layout

Segment number: 42

SG19	- C	99 -	ALC-ALI-DTM-SG20-SG21-SG22-SG23-SG24
SG21	- C	1 -	PCD-RNG
PCD	- M	1 -	Percentage details

Function:

To specify percentage information.

		EDIFACT	GS1	*	Description
C501	PERCENTAGE DETAILS	M	**M**		
5245	Percentage type code qualifier	M an..3	**M**		3 = Allowance or charge
5482	Percentage	C n..10	**R**		
5249	Percentage basis identification code	C an..3	**O**		
1131	Code list identification code	C an..17	**O**		
3055	Code list responsible agency code	C an..3	**D**		
4405	Status description code	C an..3	**N**		

Segment Notes:

This segment is used to specify percentage allowance/charge information.

Example:
PCD+3:1.25'

5. Segments Layout

Segment number: 43

SG19	- C	99 -	ALC-ALI-DTM-SG20-SG21-SG22-SG23-SG24
SG21	- C	1 -	PCD-RNG
RNG	- C	1 -	Range details

Function:

To identify a range.

		EDIFACT	GS1	*	Description
6167	Range type code qualifier	M an..3	**M**		1 = Allowance range 2 = Charge range
C280	RANGE	C	**R**		
6411	Measurement unit code	M an..3	**M**		
6162	Range minimum value	C n..18	**O**		
6152	Range maximum value	C n..18	**O**		

Segment Notes:

This segment is used to specify ranges, which apply to the previous PCD segment.

Example:
RNG+1+KGM:250:600'

5. Segments Layout

Segment number: 44

SG19	- C	99 -	ALC-ALI-DTM-SG20-SG21-SG22-SG23-SG24
SG22	- C	2 -	MOA-RNG
MOA	- M	1 -	Monetary amount

Function:

To specify a monetary amount.

		EDIFACT	GS1	*	Description
C516	MONETARY AMOUNT	M	**M**		
5025	Monetary amount type code qualifier	M an..3	**M**		23 = Charge amount 178 = Exact amount 204 = Allowance amount
5004	Monetary amount	C n..35	**R**		
6345	Currency identification code	C an..3	**O**		Use ISO 4217 three alpha
6343	Currency type code qualifier	C an..3	**O**		
4405	Status description code	C an..3	**O**		

Segment Notes:

This segment is used to specify monetary amount allowance/charge information.

Example:
MOA+23:500'

5. Segments Layout

Segment number: 45

SG19	- C	99 -	ALC-ALI-DTM-SG20-SG21-SG22-SG23-SG24
SG22	- C	2 -	MOA-RNG
RNG	- C	1 -	Range details

Function:
To identify a range.

		EDIFACT	GS1	*	Description
6167	Range type code qualifier	M an..3	**M**		3 = Monetary range
C280	RANGE	C	**R**		
6411	Measurement unit code	M an..3	**M**		
6162	Range minimum value	C n..18	**O**		
6152	Range maximum value	C n..18	**O**		

Segment Notes:
This segment is used to specify ranges, which apply to the previous MOA segment.

Example:
RNG+3+KGM:800:1200'

5. Segments Layout

Segment number: 46

SG19	- C	99 -	ALC-ALI-DTM-SG20-SG21-SG22-SG23-SG24
SG23	- C	1 -	RTE-RNG
RTE	- M	1 -	Rate details

Function:

To specify rate information.

		EDIFACT	GS1	*	Description
C128	RATE DETAILS	M	**M**		
5419	Rate type code qualifier	M an..3	**M**		1 = Allowance rate 2 = Charge rate
5420	Unit price basis rate	M n..15	**M**		
5284	Unit price basis value	C n..9	**A**		
6411	Measurement unit code	C an..3	**O**		
4405	Status description code	C an..3	**N**		

Segment Notes:

This segment is used to specify rate allowance/charge information.

Example:
RTE+2:5.5'

5. Segments Layout

Segment number: 47

SG19	- C	99 -	ALC-ALI-DTM-SG20-SG21-SG22-SG23-SG24
SG23	- C	1 -	RTE-RNG
RNG	- C	1 -	Range details

Function:

To identify a range.

		EDIFACT	GS1	*	Description
6167	Range type code qualifier	M an..3	**M**		1 = Allowance range 2 = Charge range
C280	RANGE	C	**R**		
6411	Measurement unit code	M an..3	**M**		
6162	Range minimum value	C n..18	**O**		
6152	Range maximum value	C n..18	**O**		

Segment Notes:

This segment is used to specify ranges, which apply to the previous RTE segment.

Example:
RNG+2+KGM:20:100'

5. Segments Layout

Segment number: 48

SG19	- C	99 -	ALC-ALI-DTM-SG20-SG21-SG22-SG23-SG24
SG24	- C	5 -	TAX-MOA
TAX	- M	1 -	Duty/tax/fee details

Function:

To specify relevant duty/tax/fee information.

		EDIFACT	GS1	*	Description
5283	Duty or tax or fee function code qualifier	M an..3	**M**		5 = Customs duty 7 = Tax
C241	DUTY/TAX/FEE TYPE	C	**D**		
5153	Duty or tax or fee type name code	C an..3	**O**		GST = Goods and services tax VAT = Value added tax
1131	Code list identification code	C an..17	**O**		
3055	Code list responsible agency code	C an..3	**D**		
5152	Duty or tax or fee type name	C an..35	**O**		
C533	DUTY/TAX/FEE ACCOUNT DETAIL	C	**O**		
5289	Duty or tax or fee account code	M an..6	**M**		
1131	Code list identification code	C an..17	**O**		
3055	Code list responsible agency code	C an..3	**D**		
5286	Duty or tax or fee assessment basis value	C an..15	**O**		
C243	DUTY/TAX/FEE DETAIL	C	**A**		
5279	Duty or tax or fee rate code	C an..7	**O**		
1131	Code list identification code	C an..17	**O**		
3055	Code list responsible agency code	C an..3	**D**		
5278	Duty or tax or fee rate	C an..17	**O**		
5273	Duty or tax or fee rate basis code	C an..12	**O**		
1131	Code list identification code	C an..17	**O**		
3055	Code list responsible agency code	C an..3	**D**		
5305	Duty or tax or fee category code	C an..3	**D**		A = Mixed tax rate E = Exempt from tax S = Standard rate
3446	Party tax identifier	C an..20	**N**		
1227	Calculation sequence code	C an..3	**N**		

Segment Notes:

This segment is used to specify tax information related to the allowance or charge information for the full message.

Example:
TAX+7+VAT+++:::17.5+S'

5. Segments Layout

Segment number: 48

Dependency Notes:
DE C241 and 5305: Tax types and categories will differ from country to country. They are to be defined by national guidelines.

5. Segments Layout

Segment number: 49

SG19	- C	99 -	ALC-ALI-DTM-SG20-SG21-SG22-SG23-SG24
SG24	- C	5 -	TAX-MOA
MOA	- C	1 -	Monetary amount

Function:

To specify a monetary amount.

		EDIFACT	GS1	*	Description
C516	MONETARY AMOUNT	M	**M**		
5025	Monetary amount type code qualifier	M an..3	**M**		124 = Tax amount 125 = Taxable amount
5004	Monetary amount	C n..35	**R**		
6345	Currency identification code	C an..3	**N**		
6343	Currency type code qualifier	C an..3	**N**		
4405	Status description code	C an..3	**N**		

Segment Notes:

This segment is used to specify monetary amounts related to the tax segment.

Example:
MOA+124:48.90'

5. Segments Layout

Segment number: 50

SG26	- C	200000 -	LIN-PIA-IMD-MEA-QTY-ALI-DTM-MOA-GIN-QVR-FTX-SG30-SG31-SG32-SG35-SG36-SG37-SG41-SG47
LIN	- M	1 -	Line item

Function:

To identify a line item and configuration.

		EDIFACT	GS1	*	Description
1082	Line item identifier	C an..6	**R**		Application generated number of the count of the order response lines.
1229	Action request/notification description code	C an..3	**R**		1 = Added 3 = Changed 4 = No action 5 = Accepted without amendment 7 = Not accepted DE 1229: Action Request, coded, is the critical DE in this segment. The following code value definitions apply: 1 = Addition : The supplier wishes to add a line to the buyer's purchase order. This may happen if the supplier can not accommodate the complete buyer's purchase order for a line in one delivery, and, suggests splitting the order line into two separate deliveries. When this is done each order response line must refer to the same order number and line number. 3 = Changed : The supplier accepts to supply the line item in a purchase order or purchase order change request, but requires one or more changes to the terms set out in the referenced message, as indicated by the data in, and following, the LIN segment. The buyer must acknowledge these requirements by sending a new purchase order or purchase order change request. 4 = No Action : The supplier has not yet processed the referenced line item from a purchase order or purchase order change request. 5 = Accepted : The supplier accepts to supply the line item in a purchase order or purchase order change request. Though it is not necessary to re-transmit unamended line items or cancellations, this may be done for confirmation. 7 = Not Accepted : The supplier declines to supply the line item in a purchase order or purchase order change request.
C212	ITEM NUMBER IDENTIFICATION	C	**D**		This composite will only be used for the identification of GS1 codes. If another coding structure is being used, e.g. HIBC, this composite will not be used and the code will be detailed in the PIA segment.
7140	Item identifier	C an..35	**R**		Format n..14 GTIN - this is the number of the article being ordered.
7143	Item type identification code	C an..3	**R**	*	SRV = GS1 Global Trade Item Number
1131	Code list identification code	C an..17	**N**		
3055	Code list responsible agency code	C an..3	**N**		
C829	SUB-LINE INFORMATION	C	**D**		

5. Segments Layout

Segment number: 50

		EDIFACT	GS1	*	Description
5495	Sub-line indicator code	C an..3	**R**	*	1 = Sub-line information
1082	Line item identifier	C an..6	**R**		
1222	Configuration level number	C n..2	**N**		
7083	Configuration operation code	C an..3	**N**		

Segment Notes:

This segment is used to identify the product being responded to by means of an GTIN.
If Global Trade Item Numbers are available it is mandatory to use GTIN within the LIN segment.
The detail section of the Purchase Order Response is formed by a repeating group of segments, always starting with the LIN segment.

Note on DE 1082:
Numbering rule: In Part I, section 4.10 there is the recommendation “Within EANCOM® it is recommended that the line numbers used in the first occurrence of data element 1082 in the LIN segment be sequential, starting at 1 for each new message.”

Note on DE 7140:
Only the following significant digits are possible:
- 8 digits for GTIN 8 codes
- 12 digits for GTIN 12 codes
- 13 digits for GTIN 13 codes
- 14 digits for GTIN 14 codes

Dependency Note:
C829 is only used when sub-lines are required.
FOR A COMPLETE DESCRIPTION ON THE USAGE OF SUB-LINES PLEASE REFER TO PART I, SECTION 4.10.

Example:
LIN+1+3+5412345111115:SRV'

5. Segments Layout

Segment number: 51

SG26	- C	200000 -	LIN-PIA-IMD-MEA-QTY-ALI-DTM-MOA-GIN-QVR-FTX-SG30-SG31-SG32-SG35-SG36-SG37-SG41-SG47
PIA	- C	25 -	Additional product id

Function:

To specify additional or substitutional item identification codes.

		EDIFACT	GS1	*	Description
4347	Product identifier code qualifier	M an..3	**M**	*	1 = Additional identification 3 = Substituted by 4 = Substituted for 5 = Product identification DE 4347: Product Id function coded has the following restricted coded functions: 1 - Additional Identification - To provide an additional identification for the product previously identified in the LIN segment. The additional identification can consist of : A supplemental identification which provides more information complementary to the GTIN provided in the LIN segment, e.g., a batch number, promotional variant number, product group number, etc. An alternative identification which may be used where no GTIN has been provided in the LIN segment, e.g., a buyers or sellers article number, an HIBC code, etc. 3 - Substituted by - To provide the GTIN of a product which has substituted the product identified by the GTIN provided in the LIN segment. In the Purchase Order Response this function code may be used to inform trading partners of the GTIN of the product which is replacing the product originally ordered, identified in the LIN segment. In this case, segment LIN will refer to the original ordered product and the PIA segment will provide the GTIN of the product replacing or substituting the original ordered product. 4 - Substituted for - To provide the GTIN of a product which has been substituted for the product identified by the GTIN provided in the LIN segment. In the Purchase Order Response this function code may be used to inform trading partners of an GTIN change relevant to a product. In this case, the LIN segment will contain the new GTIN and the 'Substituted for' PIA segment will identify the old GTIN which has been substituted. 5 - Product Identification - To provide the primary product identification code when no GTIN has been provided in the LIN segment.
C212	ITEM NUMBER IDENTIFICATION	M	**M**		
7140	Item identifier	C an..35	**R**		
7143	Item type identification code	C an..3	**R**		AC = HIBC (Health Industry Bar Code) CG = Commodity grouping IB = ISBN (International Standard Book Number) IN = Buyer's item number IT = Buyer's style number SA = Supplier's article number

5. Segments Layout

Segment number: 51

		EDIFACT	GS1	*	Description
					ST = Style number SRV = GS1 Global Trade Item Number
1131	Code list identification code	C an..17	**O**		
3055	Code list responsible agency code	C an..3	**D**		9 = GS1 91 = Assigned by supplier or supplier's agent 92 = Assigned by buyer or buyer's agent
C212	ITEM NUMBER IDENTIFICATION	C	**O**		
7140	Item identifier	C an..35	**R**		
7143	Item type identification code	C an..3	**R**		
1131	Code list identification code	C an..17	**O**		
3055	Code list responsible agency code	C an..3	**D**		
C212	ITEM NUMBER IDENTIFICATION	C	**O**		
7140	Item identifier	C an..35	**R**		
7143	Item type identification code	C an..3	**R**		
1131	Code list identification code	C an..17	**O**		
3055	Code list responsible agency code	C an..3	**D**		
C212	ITEM NUMBER IDENTIFICATION	C	**O**		
7140	Item identifier	C an..35	**R**		
7143	Item type identification code	C an..3	**R**		
1131	Code list identification code	C an..17	**O**		
3055	Code list responsible agency code	C an..3	**D**		
C212	ITEM NUMBER IDENTIFICATION	C	**O**		
7140	Item identifier	C an..35	**R**		
7143	Item type identification code	C an..3	**R**		
1131	Code list identification code	C an..17	**O**		
3055	Code list responsible agency code	C an..3	**D**		

Segment Notes:

This segment is used to specify additional or substitutional item identification codes such as a buyers, or sellers item number.

Example:
PIA+1+ABC1234:IN'
In this example the PIA segment is used to provide an additional identification to the GTIN provided in the LIN segment. The GTIN 5412345111115 provided in the LIN segment refers to the internal buyer's item number ABC1234.

PIA+3+5412345111184:SRV'
In this example the PIA segment is used to provide an GTIN of the product which is replacing the original ordered product, identified in the LIN segment by the GTIN 5412345111115.

5. Segments Layout

Segment number: 51

PIA+5+2209953C001L:AC'
This example details the HIBC code 2209953C001L which is provided as the primary product code because no GTIN was provided in the LIN segment.

5. Segments Layout

Segment number: 52

SG26	- C	200000 -	LIN-PIA-IMD-MEA-QTY-ALI-DTM-MOA-GIN-QVR-FTX-SG30-SG31-SG32-SG35-SG36-SG37-SG41-SG47
IMD	- C	99 -	Item description

Function:

To describe an item in either an industry or free format.

		EDIFACT	GS1	*	Description
7077	Description format code	C an..3	**O**	*	A = Free-form long description B = Code and text C = Code (from industry code list) E = Free-form short description F = Free-form S = Structured (from industry code list)
C272	ITEM CHARACTERISTIC	C	**O**		
7081	Item characteristic code	C an..3	**R**		98 = Size
1131	Code list identification code	C an..17	**O**		
3055	Code list responsible agency code	C an..3	**D**	*	9 = GS1 Must be used if DE7081 contains an GS1 code.
C273	ITEM DESCRIPTION	C	**A**		
7009	Item description code	C an..17	**O**		CU = Consumer unit (GS1 Permanent Code) DU = Despatch unit (GS1 Permanent Code) TU = Traded unit (GS1 Permanent Code) VQ = Variable quantity product (GS1 Permanent Code)
1131	Code list identification code	C an..17	**O**		
3055	Code list responsible agency code	C an..3	**D**		9 = GS1 83 = US, National Retail Federation
7008	Item description	C an..256	**O**		
7008	Item description	C an..256	**O**		
3453	Language name code	C an..3	**O**		
7383	Surface or layer code	C an..3	**N**		

Segment Notes:

This segment is used to describe the current line item.
It is recommended that this segment only be used for coded descriptions. Data element 7008 in clear text should only be used when no product code is available or when free-form descriptions are required by trading partners.
If you wish to indicate that promotional details are marked on the package, then this should be indicated in DE 7233 in the PAC segment.

Example:
IMD+C++TU::9'
IMD+F++:::CORN CRISPIES:CASE'

5. Segments Layout

Segment number: 53

SG26	- C	200000 -	LIN-PIA-IMD-MEA-QTY-ALI-DTM-MOA-GIN-QVR-FTX-SG30-SG31-SG32-SG35-SG36-SG37-SG41-SG47
MEA	- C	99 -	Measurements

Function:

To specify physical measurements, including dimension tolerances, weights and counts.

		EDIFACT	GS1	*	Description
6311	Measurement purpose code qualifier	M an..3	**M**		PD = Physical dimensions (product ordered)
C502	MEASUREMENT DETAILS	C	**A**		
6313	Measured attribute code	C an..3	**A**		DI = Diameter DP = Depth HT = Height dimension ID = Inside diameter LN = Length dimension OD = Outside diameter TH = Thickness
6321	Measurement significance code	C an..3	**O**		3 = Approximately 4 = Equal to
6155	Non-discrete measurement name code	C an..17	**O**		
6154	Non-discrete measurement name	C an..70	**N**		
C174	VALUE/RANGE	C	**R**		
6411	Measurement unit code	M an..3	**M**		
6314	Measurement value	C an..18	**O**		
6162	Range minimum value	C n..18	**O**		
6152	Range maximum value	C n..18	**O**		
6432	Significant digits quantity	C n..2	**O**		
7383	Surface or layer code	C an..3	**N**		

Segment Notes:

This segment is used to specify the actual physical dimensions of the product being ordered where that product is sold in variable lengths or volumes.
This segment must be used in conjunction with the LIN segment for the precise identification of the ordered product.

Example:
MEA+PD+LN:4+MTR:4.6'
The precise length of the product identified by the GTIN 5412345111115 is 4.6 metres.

5. Segments Layout

Segment number: 54

SG26	- C	200000 -	LIN-PIA-IMD-MEA-QTY-ALI-DTM-MOA-GIN-QVR-FTX-SG30-SG31-SG32-SG35-SG36-SG37-SG41-SG47
QTY	- C	99 -	Quantity

Function:

To specify a pertinent quantity.

		EDIFACT	GS1	*	Description
C186	QUANTITY DETAILS	M	**M**		
6063	Quantity type code qualifier	M an..3	**M**	*	1 = Discrete quantity 12 = Despatch quantity 17 = Quantity on hand 21 = Ordered quantity 47 = Invoiced quantity 52 = Quantity per pack 53 = Minimum order quantity 54 = Maximum order quantity 59 = Number of consumer units in the traded unit 83 = Backorder quantity 113 = Quantity to be delivered 170 = Allocated quantity 192 = Free goods quantity 246 = Returns replacement quantity Code value '59' is only to be used in the Purchase Order Response for confirmation purposes and not to change any information previously agreed and contained in a price or product catalogue.
6060	Quantity	M an..35	**M**		
6411	Measurement unit code	C an..3	**D**		This DE is only used if the product being responded to is a variable quantity product.

Segment Notes:

This segment is used to specify quantity information related to the current line item.
If split deliveries are being used, the quantities for the split delivery are specified in segment group 35. The totals for all quantities expressed in the QTY's at segment group level must equal the value in this QTY segment.

Example:
QTY+21:48:KGM'

5. Segments Layout

Segment number: 55

SG26	- C	200000 -	LIN-PIA-IMD-MEA-QTY-ALI-DTM-MOA-GIN-QVR-FTX-SG30-SG31-SG32-SG35-SG36-SG37-SG41-SG47
ALI	- C	5 -	Additional information

Function:

To indicate that special conditions due to the origin, customs preference, fiscal or commercial factors are applicable.

		EDIFACT	GS1	*	Description
3239	Country of origin name code	C an..3	**O**		
9213	Duty regime type code	C an..3	**O**		
4183	Special condition code	C an..3	**O**		151 = Items from the same dye lot
4183	Special condition code	C an..3	**O**		
4183	Special condition code	C an..3	**O**		
4183	Special condition code	C an..3	**O**		
4183	Special condition code	C an..3	**O**		

Segment Notes:

This segment is used to specify any additional information related to the current line item.

Example:
ALI+++151'

5. Segments Layout

Segment number: 56

SG26	- C	200000 -	LIN-PIA-IMD-MEA-QTY-ALI-DTM-MOA-GIN-QVR-FTX-SG30-SG31-SG32-SG35-SG36-SG37-SG41-SG47
DTM	- C	35 -	Date/time/period

Function:

To specify date, and/or time, or period.

		EDIFACT	GS1	*	Description
C507	DATE/TIME/PERIOD	M	**M**		
2005	Date or time or period function code qualifier	M an..3	**M**	*	2 = Delivery date/time, requested 8 = Order received date/time 11 = Despatch date and/or time 15 = Promotion start date/time 17 = Delivery date/time, estimated 44 = Availability 61 = Cancel if not delivered by this date 63 = Delivery date/time, latest 64 = Delivery date/time, earliest 69 = Delivery date/time, promised for 76 = Delivery date/time, scheduled for 200 = Pick-up/collection date/time of cargo 364 = Minimum shelf life remaining at time of despatch period 382 = Earliest sale date 506 = Back order delivery date/time/period X14 = Requested for delivery week commencing (GS1 Temporary Code) Code value '44' is used to indicate the date on which a product, which is currently not available, will again be available.
2380	Date or time or period value	C an..35	**R**		
2379	Date or time or period format code	C an..3	**R**		102 = CCYYMMDD 203 = CCYYMMDDHHMM 718 = CCYYMMDD-CCYYMMDD

Segment Notes:

This segment is used to specify any dates related to the current line item.

Example:
DTM+2:20020910:102'
This example requests delivery to be made on the 10th of September 2002.

5. Segments Layout

Segment number: 57

SG26	- C	200000 -	LIN-PIA-IMD-MEA-QTY-ALI-DTM-MOA-GIN-QVR-FTX-SG30-SG31-SG32-SG35-SG36-SG37-SG41-SG47
MOA	- C	10 -	Monetary amount

Function:

To specify a monetary amount.

		EDIFACT	GS1	*	Description
C516	MONETARY AMOUNT	M	**M**		
5025	Monetary amount type code qualifier	M an..3	**M**		40 = Customs value 203 = Line item amount 388 = Total amount including Value Added Tax (VAT)
5004	Monetary amount	C n..35	**R**		
6345	Currency identification code	C an..3	**N**		
6343	Currency type code qualifier	C an..3	**N**		
4405	Status description code	C an..3	**N**		

Segment Notes:

This segment can be used for two purposes, firstly, when allowances/charges are involved, to indicate net amounts for the line, and secondly, to provide valuation amounts, e.g., customs value.

Example:
MOA+203:1253.42'

5. Segments Layout

Segment number: 58

SG26	- C	200000 -	LIN-PIA-IMD-MEA-QTY-ALI-DTM-MOA-GIN-QVR-FTX-SG30-SG31-SG32-SG35-SG36-SG37-SG41-SG47
GIN	- C	1000 -	Goods identity number

Function:

To give specific identification numbers, either as single numbers or ranges.

		EDIFACT	GS1	*	Description
7405	Object identification code qualifier	M an..3	**M**		CPE = Coupon number (GS1 Temporary Code) CQE = Cheque number (GS1 Temporary Code)
C208	IDENTITY NUMBER RANGE	M	**M**		
7402	Object identifier	M an..35	**M**		
7402	Object identifier	C an..35	**O**		
C208	IDENTITY NUMBER RANGE	C	**O**		
7402	Object identifier	M an..35	**M**		
7402	Object identifier	C an..35	**O**		
C208	IDENTITY NUMBER RANGE	C	**O**		
7402	Object identifier	M an..35	**M**		
7402	Object identifier	C an..35	**O**		
C208	IDENTITY NUMBER RANGE	C	**O**		
7402	Object identifier	M an..35	**M**		
7402	Object identifier	C an..35	**O**		
C208	IDENTITY NUMBER RANGE	C	**O**		
7402	Object identifier	M an..35	**M**		
7402	Object identifier	C an..35	**O**		

Segment Notes:

This segment is used to indicate individual numbers, or a range of numbers, to be printed on coupons or gift cheques.

Example:
GIN+CPE+AS-1299:AS-1350'

5. Segments Layout

Segment number: 59

SG26	- C	200000 -	LIN-PIA-IMD-MEA-QTY-ALI-DTM-MOA-GIN-QVR-FTX-SG30-SG31-SG32-SG35-SG36-SG37-SG41-SG47
QVR	- C	1 -	Quantity variances

Function:

To specify item details relating to quantity variances.

		EDIFACT	GS1	*	Description
C279	QUANTITY DIFFERENCE INFORMATION	C	**A**		
6064	Quantity variance value	M n..15	**M**		Specify the actual variance amount here.
6063	Quantity type code qualifier	C an..3	**R**		21 = Ordered quantity
4221	Discrepancy nature identification code	C an..3	**O**		BP = Shipment partial - back order to follow CP = Shipment partial - considered complete, no backorder
C960	REASON FOR CHANGE	C	**O**		
4295	Change reason description code	C an..3	**O**		BJ = Item identification code unknown PC = Pack difference
1131	Code list identification code	C an..17	**O**		
3055	Code list responsible agency code	C an..3	**D**		
4294	Change reason description	C an..35	**O**		

Segment Notes:

This segment is used to specify quantity variances and reasons for variances between what was ordered and what is available as specified in the QTY segment at line level.
For negative values (e.g. partial shipments) the variance must be expressed as negative.

Example:
QVR+-20:21++BJ'
20 units of the original ordered quantity are not available because the item identification code is unknown.

5. Segments Layout

Segment number: 60

SG26	- C	200000 -	LIN-PIA-IMD-MEA-QTY-ALI-DTM-MOA-GIN-QVR-FTX-SG30-SG31-SG32-SG35-SG36-SG37-SG41-SG47
FTX	- C	99 -	Free text

Function:

To provide free form or coded text information.

		EDIFACT	GS1	*	Description
4451	Text subject code qualifier	M an..3	**M**		PUR = Purchasing information QQD = Quality demands/requirements ZZZ = Mutually defined
4453	Free text function code	C an..3	**O**		This data element is only used when non-coded free text has been provided in data element C108.
C107	TEXT REFERENCE	C	**D**		Reference to a standard text. This composite is only used when trading partners have agreed to use mutually defined code values.
4441	Free text value code	M an..17	**M**		001 = ...standard text...
1131	Code list identification code	C an..17	**O**		
3055	Code list responsible agency code	C an..3	**D**		91 = Assigned by supplier or supplier's agent 92 = Assigned by buyer or buyer's agent
C108	TEXT LITERAL	C	**D**		This composite is only used if coded text can not be used.
4440	Free text value	M an..512	**M**		
4440	Free text value	C an..512	**O**		
4440	Free text value	C an..512	**O**		
4440	Free text value	C an..512	**O**		
4440	Free text value	C an..512	**O**		
3453	Language name code	C an..3	**D**		ISO 639 two alpha code
4447	Free text format code	C an..3	**N**		

Segment Notes:

This segment is used to specify any special requirements for the current line item.
Use of this segment in free form is not recommended since it may inhibit automatic processing of the Order Response. Coded references to standard texts is an available functionality which enables automatic processing and reduces transmission and processing overheads. Standard texts should be mutually defined among trading partners and can be used to cover legal and other requirements.

Example:
FTX+ZZZ+1+001::91'

5. Segments Layout

Segment number: 61

SG26	- C	200000 -	LIN-PIA-IMD-MEA-QTY-ALI-DTM-MOA-GIN-QVR-FTX-SG30-SG31-SG32-SG35-SG36-SG37-SG41-SG47
SG30	- C	25 -	PRI-CUX-DTM
PRI	- M	1 -	Price details

Function:

To specify price information.

		EDIFACT	GS1	*	Description
C509	PRICE INFORMATION	C	**R**		
5125	Price code qualifier	M an..3	**M**		AAA = Calculation net AAE = Information price, excluding allowances or charges, including taxes AAF = Information price, excluding allowances or charges and taxes AAA - The price stated is the net price including all allowances and charges and excluding taxes. Allowances and charges may be stated for information purposes only. AAH = Subject to escalation and price adjustment AAQ = Firm price ABL = Base price ABM = Base price difference Use the codes AAH, AAQ, ABL, ABM when dealing with CSA (customer specific articles).
5118	Price amount	C n..15	**R**		
5375	Price type code	C an..3	**O**		CT = Contract CA = Catalogue
5387	Price specification code	C an..3	**O**		AAE = Not subject to fluctuation ALT = Alternate price DPR = Discount price EUP = Expected unit price LBL = Labelling price PRP = Promotional price RTP = Retail price SRP = Suggested retail price
5284	Unit price basis value	C n..9	**D**		
6411	Measurement unit code	C an..3	**D**		
5213	Sub-line item price change operation code	C an..3	**N**		

Segment Notes:

This segment is used to provide price information for the current line item.
The calculation price detailed in the Order Response will always be the Net Unit Price, i.e., Gross Price + Charges - Allowances.

Example:
PRI+AAA:14.58:CT:AAE'

Dependency Notes:
Data elements 5284 and 6411 are used when a product is a variable quantity product, e.g. price per 200 kilos, or when the unit of measure for purchasing, delivery, and invoicing are different for a product, e.g. sugar is not a variable quantity product but ordered and delivered in packs, and invoiced in kilos or tonnes.

5. Segments Layout

Segment number: 62

SG26	- C	200000 -	LIN-PIA-IMD-MEA-QTY-ALI-DTM-MOA-GIN-QVR-FTX-SG30-SG31-SG32-SG35-SG36-SG37-SG41-SG47
SG30	- C	25 -	PRI-CUX-DTM
CUX	- C	1 -	Currencies

Function:

To specify currencies used in the transaction and relevant details for the rate of exchange.

		EDIFACT	GS1	*	Description
C504	CURRENCY DETAILS	C	**R**		
6347	Currency usage code qualifier	M an..3	**M**	*	2 = Reference currency
6345	Currency identification code	C an..3	**R**		ISO 4217 three alpha
6343	Currency type code qualifier	C an..3	**R**	*	4 = Invoicing currency 9 = Order currency 10 = Pricing currency 12 = Quotation currency
6348	Currency rate value	C n..4	**N**		
C504	CURRENCY DETAILS	C	**D**		The second occurrence of this composite is only used if a target currency is being specified.
6347	Currency usage code qualifier	M an..3	**M**	*	3 = Target currency
6345	Currency identification code	C an..3	**R**		ISO 4217 three alpha
6343	Currency type code qualifier	C an..3	**R**	*	4 = Invoicing currency 9 = Order currency 10 = Pricing currency 12 = Quotation currency
6348	Currency rate value	C n..4	**O**		
5402	Currency exchange rate	C n..12	**D**		The rate of exchange is only used if a target currency has been identified in the second occurrence of C504.
6341	Exchange rate currency market identifier	C an..3	**N**		

Segment Notes:

This segment is used to specify currency data related to the previous PRI segment.
The CUX segment is mandatory for international exchanges.
This segment is used to indicate the currency, which applies to the price for the current line item.
When specifying Reference and Target Currencies for international trade, one occurrence of CUX is all that is required. The reference currency is identified in the first occurrence of composite C504, with the target currency specified in the second occurrence of C504. The rate of exchange between the two is detailed in DE 5402.

Example:
CUX+2:EUR:9'
CUX+2:EUR:9+3:USD:4+0.90243'

5. Segments Layout

Segment number: 63

SG26	- C	200000	-	LIN-PIA-IMD-MEA-QTY-ALI-DTM-MOA-GIN-QVR-FTX-SG30-SG31-SG32-SG35-SG36-SG37-SG41-SG47
SG30	- C	25	-	PRI-CUX-DTM
DTM	- C	5	-	Date/time/period

Function:

To specify date, and/or time, or period.

		EDIFACT	GS1	*	Description
C507	DATE/TIME/PERIOD	M	**M**		
2005	Date or time or period function code qualifier	M an..3	**M**		799 = Validity end date
2380	Date or time or period value	C an..35	**R**		
2379	Date or time or period format code	C an..3	**R**		102 = CCYYMMDD 203 = CCYYMMDDHHMM 718 = CCYYMMDD-CCYYMMDD

Segment Notes:

This segment is used to specify the dates (and possibly times) associated with the price of the currently identified product.

Example:
DTM+799:19991231:102'

5. Segments Layout

Segment number: 64

SG26	- C	200000 -	LIN-PIA-IMD-MEA-QTY-ALI-DTM-MOA-GIN-QVR-FTX-SG30-SG31-SG32-SG35-SG36-SG37-SG41-SG47
SG31	- C	9999 -	RFF-DTM
RFF	- M	1 -	Reference

Function:

To specify a reference.

		EDIFACT	GS1	*	Description
C506	REFERENCE	M	**M**		
1153	Reference code qualifier	M an..3	**M**		ACD = Additional reference number AE = Authorization for expense (AFE) number AKO = Action authorization number ANJ = Authorization number BO = Blanket order number CR = Customer reference number CT = Contract number GC = Government contract number IP = Import licence number ON = Order number (buyer) PL = Price list number POR = Purchase order response number PP = Purchase order change number PW = Prior purchase order number VN = Order number (supplier)
1154	Reference identifier	C an..70	**R**		
1156	Document line identifier	C an..6	**D**		Line number from original order. This data element is only used to reference line numbers from previous orders, purchase order changes, or purchase order responses.
4000	Reference version identifier	C an..35	**N**		
1060	Revision identifier	C an..6	**N**		

Segment Notes:

This segment is used to specify any references, which are applicable to the current line item only. References stated here will override those specified in the heading section when the same qualifier is used.

Example:
RFF+PL:4502'
This example refers to a price list reference number 4502.

RFF+ON:62114:6'
This example references line number 6 of the buyers order number 62114.

5. Segments Layout

Segment number: 65

SG26	- C	200000 -	LIN-PIA-IMD-MEA-QTY-ALI-DTM-MOA-GIN-QVR-FTX-SG30-SG31-SG32-SG35-SG36-SG37-SG41-SG47
SG31	- C	9999 -	RFF-DTM
DTM	- C	5 -	Date/time/period

Function:

To specify date, and/or time, or period.

		EDIFACT	GS1	*	Description
C507	DATE/TIME/PERIOD	M	**M**		
2005	Date or time or period function code qualifier	M an..3	**M**	*	171 = Reference date/time 194 = Start date/time 206 = End date/time
2380	Date or time or period value	C an..35	**R**		
2379	Date or time or period format code	C an..3	**R**		102 = CCYYMMDD 203 = CCYYMMDDHHMM

Segment Notes:

This segment is used to specify dates and times associated with the preceding RFF segment.

Example:
DTM+171:20020801:102'

5. Segments Layout

Segment number: 66

SG26	- C	200000 -	LIN-PIA-IMD-MEA-QTY-ALI-DTM-MOA-GIN-QVR-FTX-SG30-SG31-SG32-SG35-SG36-SG37-SG41-SG47
SG32	- C	99 -	PAC-MEA-QTY-SG34
PAC	- M	1 -	Package

Function:

To describe the number and type of packages/physical units.

		EDIFACT	GS1	*	Description
7224	Package quantity	C n..8	**O**		
C531	PACKAGING DETAILS	C	**O**		
7075	Packaging level code	C an..3	**O**		1 = Inner 3 = Outer
7233	Packaging related description code	C an..3	**O**		50 = Package barcoded EAN-13 or EAN-8 51 = Package barcoded ITF-14 52 = Package barcoded UCC or EAN-128
7073	Packaging terms and conditions code	C an..3	**O**		1 = Packaging cost paid by supplier 2 = Packaging cost paid by recipient 3 = Packaging cost not charged (returnable)
C202	PACKAGE TYPE	C	**O**		
7065	Package type description code	C an..17	**A**		
1131	Code list identification code	C an..17	**O**		
3055	Code list responsible agency code	C an..3	**D**		
7064	Type of packages	C an..35	**O**		
C402	PACKAGE TYPE IDENTIFICATION	C	**N**		
7077	Description format code	M an..3			
7064	Type of packages	M an..35			
7143	Item type identification code	C an..3			
7064	Type of packages	C an..35			
7143	Item type identification code	C an..3			
C532	RETURNABLE PACKAGE DETAILS	C	**D**		Composite C532 is only used where the packaging being described is returnable. This composite identifies who is responsible for the payment of its return.
8395	Returnable package freight payment responsibility code	C an..3	**O**		1 = Paid by customer 3 = Paid by supplier
8393	Returnable package load contents code	C an..3	**N**		

Segment Notes:

This segment is used to indicate the packaging details for the current line item.

Example:
PAC+++CS'

5. Segments Layout

Segment number: 67

SG26	- C	200000 -	LIN-PIA-IMD-MEA-QTY-ALI-DTM-MOA-GIN-QVR-FTX-SG30-SG31-SG32-SG35-SG36-SG37-SG41-SG47
SG32	- C	99 -	PAC-MEA-QTY-SG34
MEA	- C	5 -	Measurements

Function:

To specify physical measurements, including dimension tolerances, weights and counts.

		EDIFACT	GS1	*	Description
6311	Measurement purpose code qualifier	M an..3	**M**		PD = Physical dimensions (product ordered)
C502	MEASUREMENT DETAILS	C	**A**		
6313	Measured attribute code	C an..3	**A**		DI = Diameter DP = Depth HT = Height dimension ID = Inside diameter LN = Length dimension OD = Outside diameter TH = Thickness
6321	Measurement significance code	C an..3	**O**		3 = Approximately 4 = Equal to
6155	Non-discrete measurement name code	C an..17	**O**		
6154	Non-discrete measurement name	C an..70	**N**		
C174	VALUE/RANGE	C	**R**		
6411	Measurement unit code	M an..3	**M**		
6314	Measurement value	C an..18	**O**		
6162	Range minimum value	C n..18	**O**		
6152	Range maximum value	C n..18	**O**		
6432	Significant digits quantity	C n..2	**O**		
7383	Surface or layer code	C an..3	**N**		

Segment Notes:

This segment is used to specify the actual physical dimensions of the product being ordered where that product is sold in variable lengths or volumes.

Example:
MEA+PD+LN:4+MTR:4.6'
The precise length of the product identified by the GTIN 5412345111115 is 4.6 metres.

5. Segments Layout

Segment number: 68

SG26	- C	200000	-	LIN-PIA-IMD-MEA-QTY-ALI-DTM-MOA-GIN-QVR-FTX-SG30-SG31-SG32-SG35-SG36-SG37-SG41-SG47
SG32	- C	99	-	PAC-MEA-QTY-SG34
QTY	- C	5	-	Quantity

Function:

To specify a pertinent quantity.

		EDIFACT	GS1	*	Description
C186	QUANTITY DETAILS	M	**M**		
6063	Quantity type code qualifier	M an..3	**M**	*	52 = Quantity per pack
6060	Quantity	M an..35	**M**		
6411	Measurement unit code	C an..3	**D**		This DE is only used if the product ordered is a variable quantity product.

Segment Notes:

This segment is used to specify the total quantity per pack.

Example:
QTY+52:48:KGM'

5. Segments Layout

Segment number: 69

SG26	- C	200000 -	LIN-PIA-IMD-MEA-QTY-ALI-DTM-MOA-GIN-QVR-FTX-SG30-SG31-SG32-SG35-SG36-SG37-SG41-SG47
SG32	- C	99 -	PAC-MEA-QTY-SG34
SG34	- C	99 -	PCI-RFF-DTM-GIN
PCI	- M	1 -	Package identification

Function:

To specify markings and labels on individual packages or physical units.

		EDIFACT	GS1	*	Description
4233	Marking instructions code	C an..3	**A**		6 = Mark packages dimensions 7 = Mark net weight 8 = Mark gross weight 10 = Mark batch number 14 = Mark expiry date 16 = Buyer's instructions 17 = Supplier's instructions
C210	MARKS & LABELS	C	**D**		Composite C210 identifies specific marks or labels which the buyer wishes to have attached to the packaging.
7102	Shipping marks description	M an..35	**M**		
7102	Shipping marks description	C an..35	**O**		
7102	Shipping marks description	C an..35	**O**		
7102	Shipping marks description	C an..35	**O**		
7102	Shipping marks description	C an..35	**O**		
7102	Shipping marks description	C an..35	**O**		
7102	Shipping marks description	C an..35	**O**		
7102	Shipping marks description	C an..35	**O**		
7102	Shipping marks description	C an..35	**O**		
7102	Shipping marks description	C an..35	**O**		
8275	Container or package contents indicator code	C an..3	**N**		
C827	TYPE OF MARKING	C	**N**		
7511	Marking type code	M an..3			
1131	Code list identification code	C an..17			
3055	Code list responsible agency code	C an..3			

Segment Notes:

This segment is used to detail markings and labels on the packaging for the current line item.

Example:
PCI+14'

5. Segments Layout

Segment number: 70

SG26	- C	200000	-	LIN-PIA-IMD-MEA-QTY-ALI-DTM-MOA-GIN-QVR-FTX-SG30-SG31-SG32-SG35-SG36-SG37-SG41-SG47
SG32	- C	99	-	PAC-MEA-QTY-SG34
SG34	- C	99	-	PCI-RFF-DTM-GIN
RFF	- C	1	-	Reference

Function:

To specify a reference.

		EDIFACT	GS1	*	Description
C506	REFERENCE	M	**M**		
1153	Reference code qualifier	M an..3	**M**		CT = Contract number IP = Import licence number ON = Order number (buyer) VN = Order number (supplier)
1154	Reference identifier	C an..70	**R**		
1156	Document line identifier	C an..6	**N**		
4000	Reference version identifier	C an..35	**N**		
1060	Revision identifier	C an..6	**N**		

Segment Notes:

This segment is used to provide references associated with the PCI segment.

Example:
RFF+CT:32455'

5. Segments Layout

Segment number: 71

SG26	- C	200000	-	LIN-PIA-IMD-MEA-QTY-ALI-DTM-MOA-GIN-QVR-FTX-SG30-SG31-SG32-SG35-SG36-SG37-SG41-SG47
SG32	- C	99	-	PAC-MEA-QTY-SG34
SG34	- C	99	-	PCI-RFF-DTM-GIN
DTM	- C	5	-	Date/time/period

Function:

To specify date, and/or time, or period.

		EDIFACT	GS1	*	Description
C507	DATE/TIME/PERIOD	M	**M**		
2005	Date or time or period function code qualifier	M an..3	**M**	*	171 = Reference date/time
2380	Date or time or period value	C an..35	**R**		
2379	Date or time or period format code	C an..3	**R**		102 = CCYYMMDD 203 = CCYYMMDDHHMM

Segment Notes:

This segment is used to specify dates and times associated with the preceding RFF segment.

Example:
DTM+171:20020801:102'

5. Segments Layout

Segment number: 72

SG26	- C	200000 -	LIN-PIA-IMD-MEA-QTY-ALI-DTM-MOA-GIN-QVR-FTX-SG30-SG31-SG32-SG35-SG36-SG37-SG41-SG47
SG32	- C	99 -	PAC-MEA-QTY-SG34
SG34	- C	99 -	PCI-RFF-DTM-GIN
GIN	- C	99 -	Goods identity number

Function:

To give specific identification numbers, either as single numbers or ranges.

		EDIFACT	GS1	*	Description
7405	Object identification code qualifier	M an..3	**M**	*	AW = Serial shipping container code BJ = Serial shipping container code BN = Serial number BX = Batch number SRV = GS1 Global Trade Item Number (GS1 Temporary Code)
C208	IDENTITY NUMBER RANGE	M	**M**		
7402	Object identifier	M an..35	**M**		
7402	Object identifier	C an..35	**O**		
C208	IDENTITY NUMBER RANGE	C	**O**		
7402	Object identifier	M an..35	**M**		
7402	Object identifier	C an..35	**O**		
C208	IDENTITY NUMBER RANGE	C	**O**		
7402	Object identifier	M an..35	**M**		
7402	Object identifier	C an..35	**O**		
C208	IDENTITY NUMBER RANGE	C	**O**		
7402	Object identifier	M an..35	**M**		
7402	Object identifier	C an..35	**O**		
C208	IDENTITY NUMBER RANGE	C	**O**		
7402	Object identifier	M an..35	**M**		
7402	Object identifier	C an..35	**O**		

Segment Notes:

This segment is used to indicate numbers, which are to be marked on the packages for the current line item.

Example:
GIN+AW+354123450000000014:354123450000000106'

5. Segments Layout

Segment number: 73

SG26	- C	200000 -	LIN-PIA-IMD-MEA-QTY-ALI-DTM-MOA-GIN-QVR-FTX-SG30-SG31-SG32-SG35-SG36-SG37-SG41-SG47
SG35	- C	9999 -	LOC-QTY-DTM
LOC	- M	1 -	Place/location identification

Function:

To identify a place or a location and/or related locations.

		EDIFACT	GS1	*	Description
3227	Location function code qualifier	M an..3	**M**	*	7 = Place of delivery
C517	LOCATION IDENTIFICATION	C	**A**		
3225	Location name code	C an..25	**A**		GLN - Format n13
1131	Code list identification code	C an..17	**O**		
3055	Code list responsible agency code	C an..3	**D**		9 = GS1 DE 3055 must be used if DE 3225 is used and does not contain an UN/LOCODE.
3224	Location name	C an..256	**O**		
C519	RELATED LOCATION ONE IDENTIFICATION	C	**O**		
3223	First related location name code	C an..25	**R**		Specify ultimate delivery location, e.g. a specific point on a works site. GLN - Global Location number - Format n13
1131	Code list identification code	C an..17	**O**		
3055	Code list responsible agency code	C an..3	**D**		DE 3055 must be used if DE 3223 is used and does not contain an UN/LOCODE. 9 = GS1
3222	First related location name	C an..70	**O**		
C553	RELATED LOCATION TWO IDENTIFICATION	C	**O**		
3233	Second related location name code	C an..25	**R**		Used to further detail the delivery location. GLN - Global Location number - Format n13
1131	Code list identification code	C an..17	**O**		
3055	Code list responsible agency code	C an..3	**D**		DE 3055 must be used if DE 3233 is used and does not contain an UN/LOCODE. 9 = GS1
3232	Second related location name	C an..70	**O**		
5479	Relation code	C an..3	**N**		

Segment Notes:

This segment is used to identify the location of delivery for a split delivery order.

Example:
LOC+7+4012345500004::9'

5. Segments Layout

Segment number: 74

SG26	- C	200000	-	LIN-PIA-IMD-MEA-QTY-ALI-DTM-MOA-GIN-QVR-FTX-SG30-SG31-SG32-SG35-SG36-SG37-SG41-SG47
SG35	- C	9999	-	LOC-QTY-DTM
QTY	- C	1	-	Quantity

Function:

To specify a pertinent quantity.

		EDIFACT	GS1	*	Description
C186	QUANTITY DETAILS	M	**M**		
6063	Quantity type code qualifier	M an..3	**M**	*	11 = Split quantity 83 = Backorder quantity
6060	Quantity	M an..35	**M**		
6411	Measurement unit code	C an..3	**D**		This DE is only used if the product being responded to is a variable quantity product.

Segment Notes:

This segment is used to indicate the delivery quantity for the delivery location specified in the previous LOC segment. The total of all quantities specified in segment group 35 for the line, must equal the value for the total quantity detailed in the QTY segment at line level.

Example:
QTY+11:14'

5. Segments Layout

Segment number: 75

SG26	- C	200000 -	LIN-PIA-IMD-MEA-QTY-ALI-DTM-MOA-GIN-QVR-FTX-SG30-SG31-SG32-SG35-SG36-SG37-SG41-SG47
SG35	- C	9999 -	LOC-QTY-DTM
DTM	- C	5 -	Date/time/period

Function:

To specify date, and/or time, or period.

		EDIFACT	GS1	*	Description
C507	DATE/TIME/PERIOD	M	**M**		
2005	Date or time or period function code qualifier	M an..3	**M**	*	2 = Delivery date/time, requested 11 = Despatch date and/or time 61 = Cancel if not delivered by this date 63 = Delivery date/time, latest 64 = Delivery date/time, earliest 69 = Delivery date/time, promised for 76 = Delivery date/time, scheduled for 200 = Pick-up/collection date/time of cargo X14 = Requested for delivery week commencing (GS1 Temporary Code)
2380	Date or time or period value	C an..35	**R**		
2379	Date or time or period format code	C an..3	**R**		102 = CCYYMMDD 203 = CCYYMMDDHHMM 718 = CCYYMMDD-CCYYMMDD

Segment Notes:

This segment is used to indicate the date, time or period on which the split delivery will take place to the location identified in the LOC segment.

Example:
DTM+2:20020915:102'

5. Segments Layout

Segment number: 76

SG26	- C	200000 -	LIN-PIA-IMD-MEA-QTY-ALI-DTM-MOA-GIN-QVR-FTX-SG30-SG31-SG32-SG35-SG36-SG37-SG41-SG47
SG36	- C	10 -	TAX-MOA
TAX	- M	1 -	Duty/tax/fee details

Function:

To specify relevant duty/tax/fee information.

		EDIFACT	GS1	*	Description
5283	Duty or tax or fee function code qualifier	M an..3	**M**		5 = Customs duty 7 = Tax
C241	DUTY/TAX/FEE TYPE	C	**D**		
5153	Duty or tax or fee type name code	C an..3	**O**		GST = Goods and services tax IMP = Import tax VAT = Value added tax
1131	Code list identification code	C an..17	**O**		
3055	Code list responsible agency code	C an..3	**D**		
5152	Duty or tax or fee type name	C an..35	**O**		
C533	DUTY/TAX/FEE ACCOUNT DETAIL	C	**O**		
5289	Duty or tax or fee account code	M an..6	**M**		
1131	Code list identification code	C an..17	**O**		
3055	Code list responsible agency code	C an..3	**D**		
5286	Duty or tax or fee assessment basis value	C an..15	**O**		
C243	DUTY/TAX/FEE DETAIL	C	**A**		
5279	Duty or tax or fee rate code	C an..7	**O**		
1131	Code list identification code	C an..17	**O**		
3055	Code list responsible agency code	C an..3	**D**		
5278	Duty or tax or fee rate	C an..17	**R**		
5273	Duty or tax or fee rate basis code	C an..12	**O**		
1131	Code list identification code	C an..17	**O**		
3055	Code list responsible agency code	C an..3	**D**		
5305	Duty or tax or fee category code	C an..3	**D**		A = Mixed tax rate E = Exempt from tax S = Standard rate
3446	Party tax identifier	C an..20	**O**		
1227	Calculation sequence code	C an..3	**N**		

Segment Notes:

This segment is used to identify the type and rate of tax that is applicable for the current line item. This segment is only used if the tax rate at line level differs from the rate specified in the header section.

5. Segments Layout

Segment number: 76

Example:
TAX+7+VAT+++:::17.5+S'

Dependency Notes:
DE C241 and 5305: Tax types and categories will differ from country to country. They are to be defined by national guidelines.

5. Segments Layout

Segment number: 77

SG26	- C	200000	-	LIN-PIA-IMD-MEA-QTY-ALI-DTM-MOA-GIN-QVR-FTX-SG30-SG31-SG32-SG35-SG36-SG37-SG41-SG47
SG36	- C	10	-	TAX-MOA
MOA	- C	1	-	Monetary amount

Function:

To specify a monetary amount.

		EDIFACT	GS1	*	Description
C516	MONETARY AMOUNT	M	**M**		
5025	Monetary amount type code qualifier	M an..3	**M**		124 = Tax amount 125 = Taxable amount
5004	Monetary amount	C n..35	**R**		
6345	Currency identification code	C an..3	**N**		
6343	Currency type code qualifier	C an..3	**N**		
4405	Status description code	C an..3	**N**		

Segment Notes:

This segment is used to indicate tax amounts related to the preceding TAX segment.

Example:
MOA+124:324.55'

5. Segments Layout

Segment number: 78

SG26	- C	200000 -	LIN-PIA-IMD-MEA-QTY-ALI-DTM-MOA-GIN-QVR-FTX-SG30-SG31-SG32-SG35-SG36-SG37-SG41-SG47
SG37	- C	999 -	NAD-SG40
NAD	- M	1 -	Name and address

Function:

To specify the name/address and their related function, either by C082 only and/or unstructured by C058 or structured by C080 thru 3207.

		EDIFACT	GS1	*	Description
3035	Party function code qualifier	M an..3	**M**		UD = Ultimate customer
C082	PARTY IDENTIFICATION DETAILS	C	**A**		
3039	Party identifier	M an..35	**M**		For identification of parties it is recommended to use GLN - Format n13.
1131	Code list identification code	C an..17	**O**		
3055	Code list responsible agency code	C an..3	**R**	*	9 = GS1
C058	NAME AND ADDRESS	C	**O**		This composite may only be used to fulfill the requirements of directive 2003/58/EC, article 4.
3124	Name and address description	M an..35	**M**		
3124	Name and address description	C an..35	**O**		
3124	Name and address description	C an..35	**O**		
3124	Name and address description	C an..35	**O**		
3124	Name and address description	C an..35	**O**		
C080	PARTY NAME	C	**D**		
3036	Party name	M an..35	**M**		
3036	Party name	C an..35	**O**		
3036	Party name	C an..35	**O**		
3036	Party name	C an..35	**O**		
3036	Party name	C an..35	**O**		
3045	Party name format code	C an..3	**O**		
C059	STREET	C	**D**		
3042	Street and number or post office box identifier	M an..35	**M**		
3042	Street and number or post office box identifier	C an..35	**O**		
3042	Street and number or post office box identifier	C an..35	**O**		
3042	Street and number or post office box identifier	C an..35	**O**		
3164	City name	C an..35	**D**		
C819	COUNTRY SUB-ENTITY DETAILS	C	**D**		
3229	Country sub-entity name code	C an..9	**O**		
1131	Code list identification code	C an..17	**O**		
	Code list responsible agency				

5. Segments Layout

Segment number: 78

		EDIFACT	GS1	*	Description
3055	code	C an..3	**O**		
3228	Country sub-entity name	C an..70	**O**		County/State, clear text.
3251	Postal identification code	C an..17	**D**		
3207	Country name code	C an..3	**D**		ISO 3166 two alpha code

Segment Notes:

This segment is used to specify the ultimate (end) customer for the current line item, i.e., the party sending the order will in turn sell the goods to, or the party on whose behalf the buyer is acting as an agent.

Example:
NAD+UD+5467895056010::9'

Dependency Notes:
The following composites and data elements are only used when a coded name and address can not be used.
The affected composites and data elements are as follows:
C080 - C059 - 3164 - C819 - 3251 - 3207

5. Segments Layout

Segment number: 79

SG26	- C	200000	-	LIN-PIA-IMD-MEA-QTY-ALI-DTM-MOA-GIN-QVR-FTX-SG30-SG31-SG32-SG35-SG36-SG37-SG41-SG47
SG37	- C	999	-	NAD-SG40
SG40	- C	5	-	CTA-COM
CTA	- M	1	-	Contact information

Function:

To identify a person or a department to whom communication should be directed.

		EDIFACT	GS1	*	Description
3139	Contact function code	C an..3	**R**		IC = Information contact
C056	DEPARTMENT OR EMPLOYEE DETAILS	C	**O**		
3413	Department or employee name code	C an..17	**O**		
3412	Department or employee name	C an..35	**O**		

Segment Notes:

This segment is used to provide contact and communications information for the ultimate customer identified in the NAD segment.

Example:
CTA+IC+:MARK CARTER'

5. Segments Layout

Segment number: 80

SG26	- C	200000 -	LIN-PIA-IMD-MEA-QTY-ALI-DTM-MOA-GIN-QVR-FTX-SG30-SG31-SG32-SG35-SG36-SG37-SG41-SG47
SG37	- C	999 -	NAD-SG40
SG40	- C	5 -	CTA-COM
COM	- C	5 -	Communication contact

Function:

To identify a communication number of a department or a person to whom communication should be directed.

		EDIFACT	GS1	*	Description
C076	COMMUNICATION CONTACT	M	**M**		
3148	Communication address identifier	M an..512	**M**		
3155	Communication address code qualifier	M an..3	**M**		AO = Uniform Resource Location (URL) EM = Electronic mail TE = Telephone

Segment Notes:

This segment is used to identify the communications number and the type of communications used for the person or department identified in the CTA segment.

Example:
COM+00448132445322:TE'

5. Segments Layout

Segment number: 81

SG26	- C	200000 -	LIN-PIA-IMD-MEA-QTY-ALI-DTM-MOA-GIN-QVR-FTX-SG30-SG31-SG32-SG35-SG36-SG37-SG41-SG47
SG41	- C	99 -	ALC-ALI-DTM-SG42-SG43-SG44-SG45-SG46
ALC	- M	1 -	Allowance or charge

Function:

To identify allowance or charge details.

		EDIFACT	GS1	*	Description
5463	Allowance or charge code qualifier	M an..3	**M**		A = Allowance C = Charge N = No allowance or charge
C552	ALLOWANCE/CHARGE INFORMATION	C	**O**		
1230	Allowance or charge identifier	C an..35	**D**		If code '69' is used in DE 5189, the agreement number must be specified in DE 1230.
5189	Allowance or charge identification code	C an..3	**O**		69 = Charge for a customer specific finish
4471	Settlement means code	C an..3	**O**		3 = Vendor check/cheque to customer 5 = Charge to be paid by vendor 6 = Charge to be paid by customer
1227	Calculation sequence code	C an..3	**D**		1 = First step of calculation 2 = Second step of calculation etc, etc, etc..... 9 = Ninth step of calculation The calculation sequence indicator is used when multiple allowances and/or charges are applicable. If various allowances and/or charges percentages, quantities, monetary amount or rates are applicable to the same base price, then the calculation sequence indicator will always equal one. If the various allowances and/or charges are applied against a fluctuating price (constantly changing because of the application of other allowances and/or charges) then the sequence of calculation is indicated using this data element. If the allowance or charge is not to be applied against a fixed price then the calculation sequence indicator must be included.
C214	SPECIAL SERVICES IDENTIFICATION	C	**D**		This composite is only included if the supplier knows the type of allowance or charge.
7161	Special service description code	C an..3	**R**		DDA = Dealer discount/allowance (GS1 Temporary Code) TD = Trade discount DDA - A discount is a reduction in price of an item offered on a one off basis. An important distinction to make between a discount and an allowance is that an allowance is a reduction which is offered on a regular basis. X40 = Allowance/charge regulated by law (GS1 Temporary Code)
1131	Code list identification code	C an..17	**O**		
3055	Code list responsible agency code	C an..3	**D**	*	9 = GS1 91 = Assigned by supplier or supplier's agent 92 = Assigned by buyer or buyer's agent

5. Segments Layout

Segment number: 81

		EDIFACT	GS1	*	Description
					This data element is only used if GS1 Codes are used in data element 7161.
7160	Special service description	C an..35	**O**		
7160	Special service description	C an..35	**O**		

Segment Notes:

This segment is used to specify any allowances or charges for the current line item.
As the calculation price type (data element 5152 PRI segment) used in the purchase order response is always as net price, allowances and/or charges specified in the ALC segment group are only for information purposes.

Example:
ALC+A+++1'

5. Segments Layout

Segment number: 82

SG26	- C	200000 -	LIN-PIA-IMD-MEA-QTY-ALI-DTM-MOA-GIN-QVR-FTX-SG30-SG31-SG32-SG35-SG36-SG37-SG41-SG47
SG41	- C	99 -	ALC-ALI-DTM-SG42-SG43-SG44-SG45-SG46
ALI	- C	5 -	Additional information

Function:

To indicate that special conditions due to the origin, customs preference, fiscal or commercial factors are applicable.

		EDIFACT	GS1	*	Description
3239	Country of origin name code	C an..3	**O**		Use ISO 3166 two alpha code.
9213	Duty regime type code	C an..3	**O**		
4183	Special condition code	C an..3	**O**		6 = Subject to bonus 8 = Subject to discount
4183	Special condition code	C an..3	**O**		
4183	Special condition code	C an..3	**O**		
4183	Special condition code	C an..3	**O**		
4183	Special condition code	C an..3	**O**		

Segment Notes:

This segment is used to indicate any special conditions related to the allowance and/or charge specified in the ALC segment.

Example:
ALI+++8'

5. Segments Layout

Segment number: 83

SG26	- C	200000	-	LIN-PIA-IMD-MEA-QTY-ALI-DTM-MOA-GIN-QVR-FTX-SG30-SG31-SG32-SG35-SG36-SG37-SG41-SG47
SG41	- C	99	-	ALC-ALI-DTM-SG42-SG43-SG44-SG45-SG46
DTM	- C	5	-	Date/time/period

Function:

To specify date, and/or time, or period.

		EDIFACT	GS1	*	Description
C507	DATE/TIME/PERIOD	M	**M**		
2005	Date or time or period function code qualifier	M an..3	**M**	*	194 = Start date/time 206 = End date/time
2380	Date or time or period value	C an..35	**R**		
2379	Date or time or period format code	C an..3	**R**		102 = CCYYMMDD 203 = CCYYMMDDHHMM 718 = CCYYMMDD-CCYYMMDD

Segment Notes:

This segment is used to specify any dates which are related to the allowances and/or charges detailed in the ALC segment.

Example:
DTM+194:20021201:102'
DTM+206:20021224:102'
This example indicates that the allowances and/or charges are valid from the 1st of December 2002 to the 24th of December 2002.

5. Segments Layout

Segment number: 84

SG26	- C	200000	-	LIN-PIA-IMD-MEA-QTY-ALI-DTM-MOA-GIN-QVR-FTX-SG30-SG31-SG32-SG35-SG36-SG37-SG41-SG47
SG41	- C	99	-	ALC-ALI-DTM-SG42-SG43-SG44-SG45-SG46
SG42	- C	1	-	QTY-RNG
QTY	- M	1	-	Quantity

Function:

To specify a pertinent quantity.

		EDIFACT	GS1	*	Description
C186	QUANTITY DETAILS	M	**M**		
6063	Quantity type code qualifier	M an..3	**M**		1 = Discrete quantity
6060	Quantity	M an..35	**M**		
6411	Measurement unit code	C an..3	**D**		This data element is only used if the current product is of variable quantity.

Segment Notes:

This segment is used to specify quantity allowance/charge information.

Example:
QTY+1:35'

5. Segments Layout

Segment number: 85

SG26	- C	200000	-	LIN-PIA-IMD-MEA-QTY-ALI-DTM-MOA-GIN-QVR-FTX-SG30-SG31-SG32-SG35-SG36-SG37-SG41-SG47
SG41	- C	99	-	ALC-ALI-DTM-SG42-SG43-SG44-SG45-SG46
SG42	- C	1	-	QTY-RNG
RNG	- C	1	-	Range details

Function:

To identify a range.

		EDIFACT	GS1	*	Description
6167	Range type code qualifier	M an..3	**M**		1 = Allowance range 2 = Charge range
C280	RANGE	C	**R**		
6411	Measurement unit code	M an..3	**M**		
6162	Range minimum value	C n..18	**O**		
6152	Range maximum value	C n..18	**O**		

Segment Notes:

This segment is used to specify ranges, which apply to the previous QTY segment.

Example:
RNG+1+KGM:15:100'

5. Segments Layout

Segment number: 86

SG26	- C	200000 -	LIN-PIA-IMD-MEA-QTY-ALI-DTM-MOA-GIN-QVR-FTX-SG30-SG31-SG32-SG35-SG36-SG37-SG41-SG47
SG41	- C	99 -	ALC-ALI-DTM-SG42-SG43-SG44-SG45-SG46
SG43	- C	1 -	PCD-RNG
PCD	- M	1 -	Percentage details

Function:

To specify percentage information.

		EDIFACT	GS1	*	Description
C501	PERCENTAGE DETAILS	M	**M**		
5245	Percentage type code qualifier	M an..3	**M**		3 = Allowance or charge
5482	Percentage	C n..10	**R**		
5249	Percentage basis identification code	C an..3	**O**		
1131	Code list identification code	C an..17	**O**		
3055	Code list responsible agency code	C an..3	**D**		
4405	Status description code	C an..3	**N**		

Segment Notes:

This segment is used to specify percentage allowance/charge information.

Example:
PCD+3:2.75'

5. Segments Layout

Segment number: 87

SG26	- C	200000	-	LIN-PIA-IMD-MEA-QTY-ALI-DTM-MOA-GIN-QVR-FTX-SG30-SG31-SG32-SG35-SG36-SG37-SG41-SG47
SG41	- C	99	-	ALC-ALI-DTM-SG42-SG43-SG44-SG45-SG46
SG43	- C	1	-	PCD-RNG
RNG	- C	1	-	Range details

Function:

To identify a range.

		EDIFACT	GS1	*	Description
6167	Range type code qualifier	M an..3	**M**		1 = Allowance range 2 = Charge range
C280	RANGE	C	**R**		
6411	Measurement unit code	M an..3	**M**		
6162	Range minimum value	C n..18	**O**		
6152	Range maximum value	C n..18	**O**		

Segment Notes:

This segment is used to specify ranges, which apply to the previous PCD segment.

Example:
RNG+1+KGM:15000:25000'

5. Segments Layout

Segment number: 88

SG26	- C	200000 -	LIN-PIA-IMD-MEA-QTY-ALI-DTM-MOA-GIN-QVR-FTX-SG30-SG31-SG32-SG35-SG36-SG37-SG41-SG47
SG41	- C	99 -	ALC-ALI-DTM-SG42-SG43-SG44-SG45-SG46
SG44	- C	2 -	MOA-RNG
MOA	- M	1 -	Monetary amount

Function:

To specify a monetary amount.

		EDIFACT	GS1	*	Description
C516	MONETARY AMOUNT	M	**M**		
5025	Monetary amount type code qualifier	M an..3	**M**		23 = Charge amount 178 = Exact amount 204 = Allowance amount
5004	Monetary amount	C n..35	**R**		
6345	Currency identification code	C an..3	**O**		
6343	Currency type code qualifier	C an..3	**O**		
4405	Status description code	C an..3	**O**		

Segment Notes:

This segment is used to specify monetary amount allowance/charge information.

Example:
MOA+23:5000'

5. Segments Layout

Segment number: 89

SG26	- C	200000	-	LIN-PIA-IMD-MEA-QTY-ALI-DTM-MOA-GIN-QVR-FTX-SG30-SG31-SG32-SG35-SG36-SG37-SG41-SG47
SG41	- C	99	-	ALC-ALI-DTM-SG42-SG43-SG44-SG45-SG46
SG44	- C	2	-	MOA-RNG
RNG	- C	1	-	Range details

Function:

To identify a range.

		EDIFACT	GS1	*	Description
6167	Range type code qualifier	M an..3	**M**		3 = Monetary range
C280	RANGE	C	**R**		
6411	Measurement unit code	M an..3	**M**		
6162	Range minimum value	C n..18	**O**		
6152	Range maximum value	C n..18	**O**		

Segment Notes:

This segment is used to specify ranges, which apply to the previous MOA segment.

Example:
RNG+3+KGM:15'

5. Segments Layout

Segment number: 90

SG26	- C	200000	-	LIN-PIA-IMD-MEA-QTY-ALI-DTM-MOA-GIN-QVR-FTX-SG30-SG31-SG32-SG35-SG36-SG37-SG41-SG47
SG41	- C	99	-	ALC-ALI-DTM-SG42-SG43-SG44-SG45-SG46
SG45	- C	1	-	RTE-RNG
RTE	- M	1	-	Rate details

Function:

To specify rate information.

		EDIFACT	GS1	*	Description
C128	RATE DETAILS	M	**M**		
5419	Rate type code qualifier	M an..3	**M**		1 = Allowance rate 2 = Charge rate
5420	Unit price basis rate	M n..15	**M**		
5284	Unit price basis value	C n..9	**A**		
6411	Measurement unit code	C an..3	**O**		
4405	Status description code	C an..3	**N**		

Segment Notes:

This segment is used to specify rate allowance/charge information.

Example:
RTE+1:14.75'

5. Segments Layout

Segment number: 91

SG26	- C	200000	-	LIN-PIA-IMD-MEA-QTY-ALI-DTM-MOA-GIN-QVR-FTX-SG30-SG31-SG32-SG35-SG36-SG37-SG41-SG47
SG41	- C	99	-	ALC-ALI-DTM-SG42-SG43-SG44-SG45-SG46
SG45	- C	1	-	RTE-RNG
RNG	- C	1	-	Range details

Function:

To identify a range.

		EDIFACT	GS1	*	Description
6167	Range type code qualifier	M an..3	**M**		1 = Allowance range 2 = Charge range
C280	RANGE	C	**R**		
6411	Measurement unit code	M an..3	**M**		
6162	Range minimum value	C n..18	**O**		
6152	Range maximum value	C n..18	**O**		

Segment Notes:

This segment is used to specify ranges which apply to the previous RTE segment.

Example:
RNG+1+KGM:400:1200'

5. Segments Layout

Segment number: 92

SG26	- C	200000	-	LIN-PIA-IMD-MEA-QTY-ALI-DTM-MOA-GIN-QVR-FTX-SG30-SG31-SG32-SG35-SG36-SG37-SG41-SG47
SG41	- C	99	-	ALC-ALI-DTM-SG42-SG43-SG44-SG45-SG46
SG46	- C	5	-	TAX-MOA
TAX	- M	1	-	Duty/tax/fee details

Function:

To specify relevant duty/tax/fee information.

		EDIFACT	GS1	*	Description
5283	Duty or tax or fee function code qualifier	M an..3	**M**		5 = Customs duty 7 = Tax
C241	DUTY/TAX/FEE TYPE	C	**D**		
5153	Duty or tax or fee type name code	C an..3	**O**		GST = Goods and services tax VAT = Value added tax
1131	Code list identification code	C an..17	**O**		
3055	Code list responsible agency code	C an..3	**D**		
5152	Duty or tax or fee type name	C an..35	**O**		
C533	DUTY/TAX/FEE ACCOUNT DETAIL	C	**O**		
5289	Duty or tax or fee account code	M an..6	**M**		
1131	Code list identification code	C an..17	**O**		
3055	Code list responsible agency code	C an..3	**D**		
5286	Duty or tax or fee assessment basis value	C an..15	**O**		
C243	DUTY/TAX/FEE DETAIL	C	**A**		
5279	Duty or tax or fee rate code	C an..7	**O**		
1131	Code list identification code	C an..17	**O**		
3055	Code list responsible agency code	C an..3	**D**		
5278	Duty or tax or fee rate	C an..17	**R**		
5273	Duty or tax or fee rate basis code	C an..12	**O**		
1131	Code list identification code	C an..17	**O**		
3055	Code list responsible agency code	C an..3	**D**		
5305	Duty or tax or fee category code	C an..3	**D**		A = Mixed tax rate E = Exempt from tax S = Standard rate
3446	Party tax identifier	C an..20	**O**		
1227	Calculation sequence code	C an..3	**N**		

Segment Notes:

This segment is used to specify any taxes or duties, which related to the allowance or charge for the current line item.

5. Segments Layout

Segment number: 92

Example:
TAX+7+VAT+++:::17.5+S'

Dependency Notes:
DE C241 and 5305: Tax types and categories will differ from country to country. They are to be defined by national guidelines.

5. Segments Layout

Segment number: 93

SG26	- C	200000	-	LIN-PIA-IMD-MEA-QTY-ALI-DTM-MOA-GIN-QVR-FTX-SG30-SG31-SG32-SG35-SG36-SG37-SG41-SG47
SG41	- C	99	-	ALC-ALI-DTM-SG42-SG43-SG44-SG45-SG46
SG46	- C	5	-	TAX-MOA
MOA	- C	1	-	Monetary amount

Function:

To specify a monetary amount.

		EDIFACT	GS1	*	Description
C516	MONETARY AMOUNT	M	**M**		
5025	Monetary amount type code qualifier	M an..3	**M**		124 = Tax amount 125 = Taxable amount
5004	Monetary amount	C n..35	**R**		
6345	Currency identification code	C an..3	**N**		
6343	Currency type code qualifier	C an..3	**N**		
4405	Status description code	C an..3	**N**		

Segment Notes:

This segment is used to specify monetary amounts related to the previous TAX segment.

Example:
MOA+124:877.22'

5. Segments Layout

Segment number: 94

SG26	- C	200000	-	LIN-PIA-IMD-MEA-QTY-ALI-DTM-MOA-GIN-QVR-FTX-SG30-SG31-SG32-SG35-SG36-SG37-SG41-SG47
SG47	- C	10	-	TDT
TDT	- M	1	-	Details of transport

Function:

To specify the transport details such as mode of transport, means of transport, its conveyance reference number and the identification of the means of transport.

		EDIFACT	GS1	*	Description
8051	Transport stage code qualifier	M an..3	**M**		12 = At departure 13 = At destination 20 = Main-carriage transport
8028	Means of transport journey identifier	C an..17	**O**		Reference number covering the transport.
C220	MODE OF TRANSPORT	C	**A**		
8067	Transport mode name code	C an..3	**R**		
8066	Transport mode name	C an..17	**N**		
C228	TRANSPORT MEANS	C	**O**		
8179	Transport means description code	C an..8	**D**		23 = Rail bulk car 31 = Truck
8178	Transport means description	C an..17	**D**		
C040	CARRIER	C	**O**		
3127	Carrier identifier	C an..17	**A**		GLN - Global Location number - Format n13
1131	Code list identification code	C an..17	**O**		
3055	Code list responsible agency code	C an..3	**D**		9 = GS1
3128	Carrier name	C an..35	**O**		
8101	Transit direction indicator code	C an..3	**O**		BS = Buyer to supplier SB = Supplier to buyer
C401	EXCESS TRANSPORTATION INFORMATION	C	**N**		
8457	Excess transportation reason code	M an..3			
8459	Excess transportation responsibility code	M an..3			
7130	Customer shipment authorisation identifier	C an..17			
C222	TRANSPORT IDENTIFICATION	C	**O**		
8213	Transport means identification name identifier	C an..9	**O**		
1131	Code list identification code	C an..17	**O**		
3055	Code list responsible agency code	C an..3	**D**		DE 3055 must be used if DE 8213 is used.
8212	Transport means identification name	C an..35	**R**		Vehicle license plate/Aircraft number.
8453	Transport means nationality	C an..3	**O**		ISO 3166 two alpha code

5. Segments Layout

Segment number: 94

		EDIFACT	GS1	*	Description
	code				
8281	Transport means ownership indicator code	C an..3	**N**		

Segment Notes:

This segment may be used to specify transport information for the current line item, such as requesting an express transport service. It overrides any transport details specified in the TDT segment at the heading level of the message.

Example:
TDT+20++30+31'

Dependency Notes:
Data Elements 8179 and 8178 are only used when the type of transport must be specifically identified, that is, a generic description such as road transport is unsuitable.

5. Segments Layout

Segment number: 95

UNS - M 1 - Section control				
Function: To separate header, detail and summary sections of a message. Notes: 1. To be used by message designers when required to avoid ambiguities. Mandatory only if specified for the type of message concerned.				
	EDIFACT	GS1	*	Description
0081 Section identification	M a1	**M**	*	S = Detail/summary section separation
Segment Notes: This segment is used to separate the detail and summary sections of the message. Example: UNS+S'				

5. Segments Layout

Segment number: 96

MOA	- C	12 - Monetary amount			
Function: To specify a monetary amount.					
		EDIFACT	GS1	*	Description
C516	MONETARY AMOUNT	M	**M**		
5025	Monetary amount type code qualifier	M an..3	**M**		79 = Total line items amount 86 = Message total monetary amount 176 = Message total duty/tax/fee amount 259 = Total charges 260 = Total allowances
5004	Monetary amount	C n..35	**R**		
6345	Currency identification code	C an..3	**N**		
6343	Currency type code qualifier	C an..3	**N**		
4405	Status description code	C an..3	**N**		

Segment Notes:

This segment is used to indicate total amounts for the purchase order response.

Example:
MOA+79:15000'
MOA+259:400'
MOA+260:1800'
Assuming that the currency of the order response is EURO sterling, the total value of the line items identified in the message is 15000 EURO with the total value of charges and allowances equalling 400 and 1800 EURO respectively.

5. Segments Layout

Segment number: 97

CNT - C 10 - Control total					
Function: To provide control total.					
		EDIFACT	GS1	*	Description
C270	CONTROL	M	**M**		
6069	Control total type code qualifier	M an..3	**M**	*	1 = Total value of the quantity segments at line level in a message 2 = Number of line items in message 7 = Total gross weight 29 = Total net weight of consignment When using code value '7= Total gross weight' in this data element the total specified in data element 6066 is arrived at by adding the values in data element 6314 of the MEA segment at LIN level when code value AAB is used in the same MEA segment. When using code value '29 = Total net weight of consignment' in this data element the total specified in data element 6066 is arrived at by adding the values in data element 6314 of the MEA segment at LIN level when code value AAA is used in the same MEA segment.
6066	Control total value	M n..18	**M**		
6411	Measurement unit code	C an..3	**O**		
Segment Notes: This segment is used to provide message control totals. Example: CNT+2:157'					

5. Segments Layout

Segment number: 98

UNT - M 1 - Message trailer					
Function: To end and check the completeness of a message.					
		EDIFACT	GS1	*	Description
0074	Number of segments in the message	M n..6	**M**		The total number of segments in the message is detailed here.
0062	Message reference number	M an..14	**M**		The message reference numbered detailed here should equal the one specified in the UNH segment.
Segment Notes: This segment is a mandatory UN/EDIFACT segment. It must always be the last segment in the message. Example: UNT+107+ME000001'					

5. Segments Layout

Segment number: 99

UNZ - M 1 - Interchange trailer					
Function: To end and check the completeness of an interchange.					
		EDIFACT	GS1	*	Description
0036	Interchange control count	M n..6	**M**		Number of messages or functional groups within an interchange.
0020	Interchange control reference	M an..14	**M**		Identical to DE 0020 in UNB segment.
Segment Notes: This segment is used to provide the trailer of an interchange. UNZ+5+12345555' DE 0036: If functional groups are used, this is the number of functional groups within the interchange. If functional groups are not used, this is the number of messages within the interchange.					

6. Examples

The following is an example of a simple Purchase Order Response, reference number ORSP12856, sent the 30th March 2002, responding to a Purchase Order of three line items placed the 25th March 2002. The Purchase Order has a reference number 652744. The buyer is identified by GLN 5412345000013 and the supplier is identified by GLN 4012345500004.

The Purchase Order Response is accepting without amendment the first line item and re-sends the line item for confirmation, is amending the second line item with a change in the PAC segment so all segments below LIN in the original order are re-transmitted, and is rejecting the third line item.

Purchase Order Response message:

UNH+ME000001+ORDRSP:D:01B:UN:EAN009'	Message header
BGM+231+ORSP12856+4'	Order response number ORSP12856, accepted with proposals for change
DTM+137:20020330:102'	Message date is 30th of March 2002
RFF+ON:652744'	Message is responding to order number 652744
DTM+171:20020325:102'	Order date is 25th of March 2002
NAD+BY+5412345000013::9'	Buyer is identified using GLN 5412345000013
RFF+VA:452282'	Buyer's VAT number is 452282
NAD+SU+4012345500004::9'	Supplier is identified using GLN 4012345500004
RFF+VA:87765432'	Supplier's VAT number is 87765432
LIN+1+5+3312345501102:SRV'	First product identified by GTIN 3312345501102 is accepted
LIN+2+3+3312345501003:SRV'	Second product identified by GTIN 3312345501003 is amended
PIA+1+ABC1234:SA'	Supplier's article number ABC1234 is provided as an additional identification
IMD+C++TU::9'	Product is a traded unit
QTY+21:48'	Ordered quantity is 48
DTM+2:20020910:102'	Date of order is 10th of September 2002
MOA+203:26400'	Value of ordered line is 26400
PRI+AAA:550:CT:AAA'	Net calculation price is 550
PAC+4+1+CS'	Product is packaged in a case
TAX+7+VAT+++:::17.5+S'	Product is subject to standard VAT rate of 17.5 %
MOA+124:4620'	Tax amount for product is 4620
TDT+20++30++31'	Main carriage transport for the product is a truck
LIN+3+7+3312345501096:SRV'	Third product identified by GTIN 3312345501096 is not accepted
UNS+S'	Message detail/summary separator

6. Examples

CNT+2:3'	Count of the number of LIN segments in the message
UNT+25+ME000001'	Total number of segments in the message equals 25

Note:
The EDI interchange will include the UNB..UNZ segments and, if applicable, the UNG..UNE segments. (see Part I, section 5.7)